IEC TR 62354

Edition 3.0 2014-09

TECHNICAL REPORT

General testing procedures for medical electrical equipment

IECNORM.COM : Click to view the full PDF of IEC TR 62354:2014

IEC TR 62354:2014-09(en)

THIS PUBLICATION IS COPYRIGHT PROTECTED

Copyright © 2014 IEC, Geneva, Switzerland

All rights reserved. Unless otherwise specified, no part of this publication may be reproduced or utilized in any form or by any means, electronic or mechanical, including photocopying and microfilm, without permission in writing from either IEC or IEC's member National Committee in the country of the requester. If you have any questions about IEC copyright or have an enquiry about obtaining additional rights to this publication, please contact the address below or your local IEC member National Committee for further information.

IEC Central Office
3, rue de Varembé
CH-1211 Geneva 20
Switzerland

Tel.: +41 22 919 02 11
Fax: +41 22 919 03 00
info@iec.ch
www.iec.ch

About the IEC

The International Electrotechnical Commission (IEC) is the leading global organization that prepares and publishes International Standards for all electrical, electronic and related technologies.

About IEC publications

The technical content of IEC publications is kept under constant review by the IEC. Please make sure that you have the latest edition, a corrigenda or an amendment might have been published.

IEC Catalogue - webstore.iec.ch/catalogue

The stand-alone application for consulting the entire bibliographical information on IEC International Standards, Technical Specifications, Technical Reports and other documents. Available for PC, Mac OS, Android Tablets and iPad.

IEC publications search - www.iec.ch/searchpub

The advanced search enables to find IEC publications by a variety of criteria (reference number, text, technical committee,…). It also gives information on projects, replaced and withdrawn publications.

IEC Just Published - webstore.iec.ch/justpublished

Stay up to date on all new IEC publications. Just Published details all new publications released. Available online and also once a month by email.

Electropedia - www.electropedia.org

The world's leading online dictionary of electronic and electrical terms containing more than 30 000 terms and definitions in English and French, with equivalent terms in 14 additional languages. Also known as the International Electrotechnical Vocabulary (IEV) online.

IEC Glossary - std.iec.ch/glossary

More than 55 000 electrotechnical terminology entries in English and French extracted from the Terms and Definitions clause of IEC publications issued since 2002. Some entries have been collected from earlier publications of IEC TC 37, 77, 86 and CISPR.

IEC Customer Service Centre - webstore.iec.ch/csc

If you wish to give us your feedback on this publication or need further assistance, please contact the Customer Service Centre: csc@iec.ch.

IECNORM.COM : Click to view the full PDF of IEC TR 62354:2014

IEC TR 62354

Edition 3.0 2014-09

TECHNICAL REPORT

General testing procedures for medical electrical equipment

IECNORM.COM : Click to view the full PDF of IEC TR 62354:2014

INTERNATIONAL
ELECTROTECHNICAL
COMMISSION

PRICE CODE XH

ICS 11.040

ISBN 978-2-8322-1856-3

Warning! Make sure that you obtained this publication from an authorized distributor.

® Registered trademark of the International Electrotechnical Commission

CONTENTS

FOREWORD 6
INTRODUCTION 9
1 Scope and object 10
2 Normative references 10
3 Terms, definitions, abbreviations and acronyms 11
3.1 Terms and definitions 11
3.2 Abbreviations and acronyms 12
4 Types of tests 12
4.1 GENERAL 12
4.2 Visual inspection 13
5 State of the ME EQUIPMENT 13
6 Number of samples 13
7 Applicable test items to the clauses of IEC 60601-1 13
8 Sequence of tests 13
9 General testing condition 14
10 Power sources for tests 15
10.1 General 15
10.2 Connection to a separate power source 16
10.3 Connection to an external d.c. power source 16
10.4 Source of power for ME EQUIPMENT 16
10.5 SUPPLY MAINS for testing ME EQUIPMENT 16
11 Measurement and test equipment 17
11.1 General requirements 17
11.2 Accuracy 18
11.3 Safety criteria for selection 18
11.4 Calibration 18
12 Treatments of unit symbols and measured values 19
13 PROCEDURES for testing, including particular conditions 19
13.1 General 19
13.2 Tests to be performed by inspection 20
13.3 Measurements and tests performed on non-energized equipment 41
13.4 Measurements and tests for equipment that is operating 96
Annex A (informative) Sequence of testing 165
A.1 Sequence of testing (IEC 60601-1:1988) 165
A.2 Sequence of testing (IEC 60601-1:2005) 166
Annex B (informative) Information typically required for product safety testing (Guide) 168
B.1 Purpose 168
B.2 Description 168
B.3 Intended use environment 168
B.4 Construction 168
B.5 List of safety-related components and relevant approvals 168
B.6 Test system 168
B.7 Power 168
B.8 Grounding 169

IECNORM.COM : Click to view the full PDF of IEC TR 62354:2014

B.9 Modes of operation; configurations ... 169
B.10 Failure modes ... 169
B.11 RISK ANALYSIS according with ISO 14971 ... 169
B.12 Software ... 169
B.13 Auxiliary equipment ... 169
B.14 Transformers and chokes ... 169
Annex C (informative) Testing and measuring equipment ... 170
Annex D (informative) Suitable measuring supply circuits ... 171
Annex E (informative) Preventive maintenance ... 174
E.1 General ... 174
E.2 Cleaning and disinfection ... 174
E.3 Preventive maintenance checklist ... 174
E.4 OPERATOR checks ... 174
Annex F (informative) Test probes ... 175
Annex G (informative) Index of tests (IEC 60601-1:2005 clauses order) ... 177
Annex H (informative) Index of tests for an INTERNALLY POWERED EQUIPMENT – battery only – (IEC 60601-1:2005 clauses order) ... 179
Annex I (informative) Index of tests (IEC 60601-1:2005 alphabetic order) ... 181
Annex J (informative) Index of tests for an INTERNALLY POWERED EQUIPMENT – battery only – (IEC 60601-1:2005 alphabetic order) ... 183
Annex K (informative) Production line tests ... 185
K.1 Production-line dielectric voltage-withstand test ... 185
K.2 Production-line grounding-continuity test ... 186
K.3 Production-line EARTH LEAKAGE CURRENT test ... 186
K.4 Recommended features for specific test equipment ... 186
Annex L (informative) Evaluation of the laboratory power source characteristics ... 189
L.1 Purpose ... 189
L.2 Application ... 189
L.3 Definitions ... 190
L.4 Testing ... 191
Annex M (informative) Traceability of calibrations and calibration intervals ... 194
M.1 Purpose ... 194
M.2 Traceability of calibrations ... 194
M.3 Calibration intervals for test equipment requiring calibration ... 194
Annex N (informative) Guidance for preparation, attachment, extension, use of thermocouples and acceptance of thermocouple wire ... 196
N.1 General ... 196
N.2 Preparation ... 196
N.3 Placement ... 196
N.4 Attachment ... 197
N.5 Extension ... 198
N.6 Use ... 199
N.7 Acceptance of thermocouples wire ... 199
Annex O (informative) Guideline for safe laboratory work ... 201
O.1 BASIC SAFETY guidelines for working with test instruments ... 201
O.2 Basic guidelines for performing safety tests ... 203
O.3 Basic guidelines regarding test personnel and test areas ... 205

IECNORM.COM : Click to view the full PDF of IEC TR 62354:2014

O.4 Contents of a documented safe environment for working in a testing laboratory 206
Bibliography 207
Index of defined terms 209

Figure 1 – Area of the bottom of an ENCLOSURE as specified in 11.3 b) 1) 37
Figure 2 – Baffle 37
Figure 3 – CREEPAGE DISTANCE and AIR CLEARANCE – Example 1 51
Figure 4 – CREEPAGE DISTANCE and AIR CLEARANCE – Example 2 51
Figure 5 – CREEPAGE DISTANCE and AIR CLEARANCE – Example 3 52
Figure 6 – CREEPAGE DISTANCE and AIR CLEARANCE – Example 4 52
Figure 7 – CREEPAGE DISTANCE and AIR CLEARANCE – Example 5 52
Figure 8 – CREEPAGE DISTANCE and AIR CLEARANCE – Example 6 52
Figure 9 – CREEPAGE DISTANCE and AIR CLEARANCE – Example 7 53
Figure 10 – CREEPAGE DISTANCE and AIR CLEARANCE – Example 8 53
Figure 11 – CREEPAGE DISTANCE and AIR CLEARANCE – Example 9 54
Figure 12 – CREEPAGE DISTANCE and AIR CLEARANCE – Example 10 54
Figure 13 – Human body test mass 73
Figure 14 – Application of test voltage to bridged PATIENT CONNECTIONS (common mode) for DEFIBRILLATION-PROOF APPLIED PARTS 103
Figure 15 – Application of test voltage to individual PATIENT CONNECTIONS (differential mode) for DEFIBRILLATION-PROOF APPLIED PARTS 104
Figure 16 – Application of test voltage to test the delivered defibrillation energy (energy reduction test) 108
Figure 17 – Example of a measuring device and its frequency characteristics 110
Figure 18 – Measuring circuit for the EARTH LEAKAGE CURRENT of CLASS I equipment, with or without APPLIED PARTS 112
Figure 19 – Measuring circuit for the TOUCH CURRENT 115
Figure 20 – Measuring circuit for the PATIENT LEAKAGE CURRENT from the PATIENT CONNECTION to earth 117
Figure 21 – Measuring circuit for the total PATIENT LEAKAGE CURRENT with all PATIENT CONNECTIONS of all APPLIED PARTS of the same type (TYPE B APPLIED PARTS, TYPE BF APPLIED PARTS or TYPE CF APPLIED PARTS) connected together 118
Figure 22 – Measuring circuit for the PATIENT LEAKAGE CURRENT via the PATIENT CONNECTION(S) of an F-TYPE APPLIED PART to earth caused by an external voltage on the PATIENT CONNECTION(S) 120
Figure 23 – Measuring circuit for the PATIENT LEAKAGE CURRENT from PATIENT CONNECTION(S) to earth caused by an external voltage on a metal ACCESSIBLE PART that is not PROTECTIVELY EARTHED 121
Figure 24 – Measuring circuit for the PATIENT LEAKAGE CURRENT from PATIENT CONNECTION(S) to earth caused by an external voltage on a SIGNAL INPUT/OUTPUT PART 123
Figure 25 – Measuring circuit for the PATIENT AUXILIARY CURRENT 125
Figure 26 – Ratio between hydraulic test pressure and maximum permissible working pressure 129
Figure 27 – Spark ignition test apparatus 136
Figure 28 – Maximum allowable current *I* as a function of the maximum allowable voltage *U* measured in a purely resistive circuit in an OXYGEN RICH ENVIRONMENT 139

IECNORM.COM : Click to view the full PDF of IEC TR 62354:2014

Figure 29 – Maximum allowable voltage *U* as a function of the capacitance *C* measured in a capacitive circuit used in an OXYGEN RICH ENVIRONMENT 139
Figure 30 – Maximum allowable current *I* as a function of the inductance *L* measured in an inductive circuit in an OXYGEN RICH ENVIRONMENT 140
Figure D.1 – Measuring supply circuit with one side of the SUPPLY MAINS at approximately earth potential 171
Figure D.2 – Measuring supply circuit with SUPPLY MAINS approximately symmetrical to earth potential 171
Figure D.3 – Measuring supply circuit for polyphase ME EQUIPMENT specified for connection to a polyphase SUPPLY MAINS 171
Figure D.4 – Measuring supply circuit for single-phase ME EQUIPMENT specified for connection to a polyphase SUPPLY MAINS 172
Figure D.5 – Measuring supply circuit for ME EQUIPMENT having a separate power supply unit or intended to receive its power from another equipment in an ME SYSTEM 172
Figure F.1 – Standard test finger 175
Figure F.2 – Test hook 176
Figure F.3 – Test pin 176
Figure F.4 – Ball-pressure test apparatus 176
Figure N.1 – Thermocouple preparation 196
Figure N.2 – Securing of thermocouples 197
Figure N.3 – Example of confinement of a thermocouple 198
Figure N.4 – Example where thermocouple connectors need not be used 199

Table 1 – Units outside the SI units system that may be used 19
Table 2 – Tests to be performed by inspection 20
Table 3 – NOMINAL cross-sectional area of conductors of a POWER SUPPLY CORD 31
Table 4 – Acceptable perforation of the bottom of an ENCLOSURE 38
Table 5 – Measurements and tests performed on non-energized equipment 41
Table 6 – Testing of cord anchorages 56
Table 7 – Acceptable gaps [a] 62
Table 8 – Drop height 87
Table 9 – Test torques for rotating controls 93
Table 10 – Measurements and tests for equipment that is operating 96
Table 11 – Allowable maximum temperatures for skin contact with ME EQUIPMENT APPLIED PARTS 147
Table 12 – Allowable maximum temperatures for ME EQUIPMENT parts that are likely to be touched 147
Table 13 – Allowable maximum temperatures of parts 148
Table 14 – Temperature limits of motor windings 148
Table 15 – Maximum motor winding steady-state temperature 149
Table 16 – Maximum allowable temperatures of transformer windings under overload and short-circuit conditions at 25 °C (± 5 °C) ambient temperature 149
Table 17 – Test current for transformers 162
Table C.1 – IEC 60601-1:1988+AMD 1:1991 and AMD 2:1995 170
Table D.1 – Legends of symbols for Figure D.1 to Figure D.5 173
Table L.1 – Method for testing a single phase laboratory power source 191

IECNORM.COM : Click to view the full PDF of IEC TR 62354:2014

INTERNATIONAL ELECTROTECHNICAL COMMISSION

GENERAL TESTING PROCEDURES FOR MEDICAL ELECTRICAL EQUIPMENT

FOREWORD

1) The International Electrotechnical Commission (IEC) is a worldwide organization for standardization comprising all national electrotechnical committees (IEC National Committees). The object of IEC is to promote international co-operation on all questions concerning standardization in the electrical and electronic fields. To this end and in addition to other activities, IEC publishes International Standards, Technical Specifications, Technical Reports, Publicly Available Specifications (PAS) and Guides (hereafter referred to as "IEC Publication(s)"). Their preparation is entrusted to technical committees; any IEC National Committee interested in the subject dealt with may participate in this preparatory work. International, governmental and non-governmental organizations liaising with the IEC also participate in this preparation. IEC collaborates closely with the International Organization for Standardization (ISO) in accordance with conditions determined by agreement between the two organizations.

2) The formal decisions or agreements of IEC on technical matters express, as nearly as possible, an international consensus of opinion on the relevant subjects since each technical committee has representation from all interested IEC National Committees.

3) IEC Publications have the form of recommendations for international use and are accepted by IEC National Committees in that sense. While all reasonable efforts are made to ensure that the technical content of IEC Publications is accurate, IEC cannot be held responsible for the way in which they are used or for any misinterpretation by any end user.

4) In order to promote international uniformity, IEC National Committees undertake to apply IEC Publications transparently to the maximum extent possible in their national and regional publications. Any divergence between any IEC Publication and the corresponding national or regional publication shall be clearly indicated in the latter.

5) IEC itself does not provide any attestation of conformity. Independent certification bodies provide conformity assessment services and, in some areas, access to IEC marks of conformity. IEC is not responsible for any services carried out by independent certification bodies.

6) All users should ensure that they have the latest edition of this publication.

7) No liability shall attach to IEC or its directors, employees, servants or agents including individual experts and members of its technical committees and IEC National Committees for any personal injury, property damage or other damage of any nature whatsoever, whether direct or indirect, or for costs (including legal fees) and expenses arising out of the publication, use of, or reliance upon, this IEC Publication or any other IEC Publications.

8) Attention is drawn to the Normative references cited in this publication. Use of the referenced publications is indispensable for the correct application of this publication.

9) Attention is drawn to the possibility that some of the elements of this IEC Publication may be the subject of patent rights. IEC shall not be held responsible for identifying any or all such patent rights.

IECNORM.COM : Click to view the full PDF of IEC TR 62354:2014

The main task of IEC technical committees is to prepare International Standards. However, a technical committee may propose the publication of a technical report when it has collected data of a different kind from that which is normally published as an International Standard, for example "state of the art".

IEC 62354, which is a technical report, has been prepared by subcommittee 62A: Common aspects of electrical equipment used in medical practice, of IEC technical committee 62: Electrical equipment in medical practice.

This third edition cancels and replaces the second edition published in 2009. This edition constitutes a technical revision intended to align the guidance in this technical report with Amendment 1 to IEC 60601:2005. Several tests have been updated and additional test procedures added. The following tests have been added or significantly revised:

13.2.1 RISK MANAGEMENT PROCESS

13.2.4 Durability and legibility of marking

13.2.5 Battery markings

13.2.8 POTENTIAL EQUALIZATION TERMINAL

13.2.14 USABILITY of ME EQUIPMENT

13.3.1 Humidity preconditioning

13.3.2 Impedance of PE connection

13.3.7 CREEPAGE DISTANCES and AIR CLEARANCES

13.3.12 Instability (in transport position; excluding transport; from horizontal and vertical forces and from unwanted lateral movement)

13.3.13 Castors and wheels (Force for propulsion, movement over a threshold)

13.3.14 Safety catch evaluation

13.3.17 Overflow

13.3.18 Spillage

13.3.23 Impact

13.3.14 Drop impact

13.3.25 Rough handling

13.3.27 Actuating parts of controls

13.3.28 Construction of transformers

13.4.1 ESSENTIAL PERFORMANCE – Functional

13.4.3 Voltage mismatch

13.4.4 Limitation of voltage, current or energy

13.4.5 DEFIBRILLATION-PROOF APPLIED PART protection

13.4.6 Energy reduction

13.4.7 EARTH LEAKAGE CURRENT

13.4.9 PATIENT LEAKAGE CURRENT

13.4.14 Sound pressure level measurements

13.4.16 X-radiation (ionizing radiation) measurement

13.4.20 Interruption of power supply

13.4.28 Rechargeable battery overcharge/discharge

13.4.29 Mains transformers

This technical report is intended to be read in conjunction with IEC 60601-1:1988 (including the collateral provisions of IEC 60601-1-1:2000) and IEC 60601-1:2005 and IEC 60601-1:2005/AMD1:2012.

The text of this technical report is based on the following documents:

Enquiry draft	Report on voting
62A/936/DTR	62A/947/RVC

Full information on the voting for the approval of this technical report can be found in the report on voting indicated in the above table.

In this technical report, the terms defined in Clause 2 of IEC 60601-1:1988 or Clause 3 of IEC 60601-1:2005 are printed in SMALL CAPITALS.

This publication has been drafted in accordance with the ISO/IEC Directives, Part 2.

IECNORM.COM : Click to view the full PDF of IEC TR 62354:2014

The committee has decided that the contents of this publication will remain unchanged until the stability date indicated on the IEC web site under "http://webstore.iec.ch" in the data related to the specific publication. At this date, the publication will be

- reconfirmed,
- withdrawn,
- replaced by a revised edition, or
- amended.

A bilingual version of this publication may be issued at a later date.

IECNORM.COM : Click to view the full PDF of IEC TR 62354:2014

INTRODUCTION

IEC/TR 60513, *Fundamental aspects of safety standards for medical electrical equipment* published by IEC sub-committee 62A provided the basis for inclusion of the test methods for ME EQUIPMENT in the safety standards.

"Technical requirements and test methods are interrelated elements of product standards and should always be considered together.

Product standards should identify where medically informed judgements are required in deciding whether a particular requirement applies.

Wherever possible, the standards should contain test specifications for completely and clearly checking compliance with the technical requirements. In some cases, a compliance statement such as 'visual inspection', 'manual testing' or similar is adequate for this purpose if such a method gives an accurate assessment.

It should be easy to recognize which test methods apply to each technical requirement. Appropriate headings should designate the appropriate test and a reference should be made to the clause containing the requirement. This also applies for references which are made to other relevant test standards."

It was deemed necessary to support IEC 60601-1 with guidelines for general testing PROCEDURES for MEDICAL ELECTRICAL EQUIPMENT.

In developing the test PROCEDURES, the advice given in IEC/TR 60513 and ISO/IEC Guide 51 was considered as follows:

a) test results should be reproducible within defined limits. When considered necessary, the test method should incorporate a statement as to its limit of uncertainty;

b) where the sequence of tests can influence the results, the correct sequence should be specified.

There is also growing support for the idea that all the test PROCEDURES for ME EQUIPMENT should be found within one international standard.

ISO/IEC 17025, *General requirements for the competence of testing and calibration laboratories*, highlights the need for a single series of requirements covering test PROCEDURES.

IEC/TR 60513 includes a major new principle referring to testing:

> “In specifying minimum safety requirements, provision is made for assessing the adequacy of the design PROCESS where this provides an appropriate alternative to the application of laboratory testing with specific pass/fail criteria, (e.g. in assessing the safety of new technologies such as programmable electronic systems).”

IECNORM.COM : Click to view the full PDF of IEC TR 62354:2014

GENERAL TESTING PROCEDURES FOR MEDICAL ELECTRICAL EQUIPMENT

1 Scope and object

This technical report applies to MEDICAL ELECTRICAL EQUIPMENT (as defined in Subclauses 3.63 of IEC 60601-1:2005 and 2.2.15 of IEC 60601-1:1988), hereinafter referred to as ME EQUIPMENT.

The object of this technical report is to provide guidance on general testing PROCEDURES according to IEC 60601-1:1988 (including the collateral provisions of IEC 60601-1-1:2000) and IEC 60601-1:2005 and IEC 60601-1:2005/AMD1:2012.

2 Normative references

The following documents, in whole or in part, are normatively referenced in this document and are indispensable for its application. For dated references, only the edition cited applies. For undated references, the latest edition of the referenced document (including any amendments) applies.

IEC 60086-4, *Primary batteries – Part 4: Safety of lithium batteries*

IEC 60127-1, *Miniature fuses – Part 1: Definitions for miniature fuses and general requirements for miniature fuse-links*

IEC 60252-1, *AC motor capacitors – Part 1: General – Performance, testing and rating – Safety requirements – Guide for installation and operation*

IEC 60364-4-41, *Low voltage electrical installations – Part 4-41: Protection for safety – Protection against electric shock*

IEC 60417, *Graphical symbols for use on equipment.* Available from: http://www.graphical-symbols.info/equipment

IEC/TR 60513, *Fundamental aspects of safety standards for medical electrical equipment*

IEC 60529:1989, *Degrees of protection provided by enclosures (IP Code)*
IEC 60529:1989/AMD1:1999[1]

IEC 60601-1:1988, *Medical electrical equipment – Part 1: General requirements for safety*[2]
IEC 60601-1:1998/AMD1:1991
IEC 60601-1:1998/AMD2:1995

IEC 60601-1:2005, *Medical electrical equipment – Part 1: General requirements for basic safety and essential performance*
IEC 60601-1:2005/AMD1:2012[3]

IECNORM.COM : Click to view the full PDF of IEC TR 62354:2014

[1] A consolidated version 2.1 (2001) exists that includes IEC 60529:1989 and its Amendment 1:1999.

[2] The second edition of IEC 60601-1, cancelled and replaced by the third edition in 2005.

[3] A consolidated version 3.1 (2012) exists that includes IEC 60601-1:2005 and its Amendment 1:2012.

IEC 60601-1-2, *Medical electrical equipment – Part 1-2: General requirements for basic safety and essential performance – Collateral Standard: Electromagnetic disturbances – Requirements and tests*

IEC 61010 (all parts), *Safety requirements for electrical equipment for measurement, control, and laboratory use*

IEC 61010-1, *Safety requirements for electrical equipment for measurement, control, and laboratory use – Part 1: General requirements*

IEC 61672-1, *Electroacoustics – Sound level meters – Part 1: Specifications*

IEC 61672-2, *Electroacoustics – Sound level meters – Part 2: Pattern evaluation tests*

IEC 62133, *Secondary cells and batteries containing alkaline or other non-acid electrolytes – Safety requirements for portable sealed secondary cells, and for batteries made from them, for use in portable applications*

ISO 17665-1, *Sterilization of health care products – Moist heat – Part 1: Requirements for the development, validation and routine control of a sterilization process for medical devices*

ISO 11135-1, *Medical devices – Validation and routine control of ethylene oxide sterilization*[4]

ISO 11137-1, *Sterilization of health care products – Radiation – Part 1: Requirements for development, validation and routine control of a sterilization process for medical devices*

ISO 14971:2007, *Medical devices – Application of risk management to medical devices*

ISO/IEC 17025, *General requirements for the competence of testing and calibration laboratories*

ISO 80000-1, *Quantities and units – Part 1: General*

3 Terms, definitions, abbreviations and acronyms

3.1 Terms and definitions

For the purposes of this document, the terms and definitions given in IEC 60601-1:1988 and IEC 60601-1:2005 apply.

NOTE 1 Where the terms “voltage” and “current” are used in this document, they mean the r.m.s. values of an alternating, direct or composite voltage or current unless stated otherwise.

NOTE 2 An index of defined terms is found beginning on page 209.

NOTE 3 When used in the body of this document, N/A means “Not applicable”.

IECNORM.COM : Click to view the full PDF of IEC TR 62354:2014

[4] Withdrawn and replaced by ISO 11135:2014.

3.2 Abbreviations and acronyms

Abbreviation	Term
a.c.	Alternating current
d.c.	Direct current
DUT	Device under test
MAR	Mean angle resolvable
MD	Measuring device
ME	MEDICAL ELECTRICAL
RH	Relative humidity
r.m.s.	Root mean square
SI	System international
SIP/SOP	SIGNAL INPUT/OUTPUT PART

4 Types of tests

4.1 GENERAL

"TYPE TESTS" are required for verifying the BASIC SAFETY and ESSENTIAL PERFORMANCE of the product design.

NOTE 1 The tests described in this technical report can also be used by the MANUFACTURER to ensure the quality of the product and the manufacturing PROCESS. See Annex I.

A test need not be carried out if analysis shows that the condition being tested has been adequately evaluated by other tests or methods.

The results of the RISK ANALYSIS should additionally be used to determine which combination(s) of simultaneous faults should be tested.

NOTE 2 The test results might render it necessary to revise the RISK ANALYSIS.

When testing the ME EQUIPMENT, relevant information provided by the MANUFACTURER in the instruction for use should be taken into account.

Before commencing testing, the ME EQUIPMENT under test (the device under test or DUT) should be disconnected from the SUPPLY MAINS. If not possible, special precautions should be taken to prevent HARM to the personnel performing the tests and measurements or other individuals who might be affected.

Connections such as data lines or functional earth conductors can act like PROTECTIVE EARTH CONNECTIONS. Such additional, but unintentional, PROTECTIVE EARTH CONNECTIONS can create measurement errors.

Unless otherwise specified in IEC 60601-1, ME EQUIPMENT is to be tested under the least favourable working conditions. The working conditions are specified in the ACCOMPANYING DOCUMENTS. The least favourable working conditions are to be documented for every test where they apply.

Considering the ambient temperature, humidity and pressure described in the technical description, tests should be performed at the worst-case extremes depending on the test and the effects of these parameters on the test results. If the test is not impacted by these parameters, then test can be conducted anywhere within the specified range.

IECNORM.COM : Click to view the full PDF of IEC TR 62354:2014

4.2 Visual inspection

Covers and housings should be opened only:

– if required in the instructions for use for the ME EQUIPMENT, or
– if specified in this technical report, or
– if there is an indication of a HAZARD or HAZARDOUS SITUATION.

Special attention should be paid to the following:

– all fuses accessible from the outside should be marked (type, ratings) on the ME EQUIPMENT or marked by reference and specified in the ACCOMPANYING DOCUMENTS;
– the markings are legible and complete;
– any damage;
– relevant ACCESSORIES should be assessed together with the ME EQUIPMENT (e.g. DETACHABLE or FIXED POWER SUPPLY CORDS, PATIENT leads, tubing etc.);
– all required documentation, such as instructions for use, is present and complete and reflects the current revision of the ME EQUIPMENT.

5 State of the ME EQUIPMENT

Some tests specified in this document are conducted in the NORMAL CONDITION whilst others are conducted in SINGLE FAULT CONDITIONS.

NORMAL CONDITION and SINGLE FAULT CONDITIONS are described in both IEC 60601-1:1988 and IEC 60601-1:2005.

6 Number of samples

TYPE TESTS are performed on a representative sample of the item being assessed.

Multiple samples can be utilized simultaneously if the validity of the results is not significantly affected.

7 Applicable test items to the clauses of IEC 60601-1

Table 2, Table 5 and Table 10 relate the test PROCEDURES described in this technical report to the relevant subclauses of IEC 60601-1:2005. When applicable, these tables also provide a cross reference to the relevant subclauses of IEC 60601-1:1988.

Annex G and Annex H contain an index of the tests in this technical report sorted by the relevant subclause in IEC 60601-1:2005. Annex I and Annex J contain the lists sorted in alphabetical order by test title.

8 Sequence of tests

Unless stated otherwise, the tests in this technical report are to be sequenced in such a way so that the results of any test do not influence the results of other tests. Tests should, if applicable, be performed in the sequence indicated in Annex A, unless otherwise stated by particular standards.

However, this does not preclude the possibility of conducting a test that preliminary inspection suggests might cause failure.

IECNORM.COM : Click to view the full PDF of IEC TR 62354:2014

The tests for radiation HAZARDS, biocompatibility, USABILITY, alarm systems, PEMS and electromagnetic compatibility can be performed independently from the tests specified in the present document.

The tests specified for ME SYSTEMS should be performed in the same sequence as the tests for ME EQUIPMENT.

9 General testing condition

The following general testing conditions should be applied:

a) After the DUT has been set up for NORMAL USE, tests are carried out under the least favourable working conditions which are specified in the ACCOMPANYING DOCUMENTS.

b) The DUT is to be shielded from other influences (for example, draughts) that might affect the validity of the tests.

c) In cases where ambient temperatures cannot be maintained, the test conditions are to be consequently modified and results adjusted accordingly.

d) Qualified personnel are to perform these tests. Qualifications include training on the subject, knowledge, experience, and acquaintance with the relevant technologies and regulations. The personnel should be able to assess safety and should be able to recognize possible consequences and HAZARDS arising from non-conforming ME EQUIPMENT

e) ACCESSORIES for the ME EQUIPMENT, which can affect the safety of the DUT or the results of the measurements, should be included in the tests. ACCESSORIES included in the tests are to be documented.

f) All tests are to be performed in such a manner that no unacceptable RISK arises for testing personnel, PATIENTS or other individuals.

g) If not otherwise stated, all values for current and voltage are effective values (r.m.s.) or d.c. values as appropriate.

h) All tests performed should be comprehensively documented. The documentation should contain as a minimum the following data:

   – identification of the testing body (e. g. company, department);

   – names of the persons, who performed the testing and the evaluation(s);

   – identification of the ME EQUIPMENT (e. g. type, serial number, inventory number) and the ACCESSORIES tested;

   – measurements (measured values, measuring method, measuring equipment, environmental conditions);

   – date and signature of the individual, who performed the evaluation; and

   – if applicable, the ME EQUIPMENT tested should be marked/identified accordingly.

i) In addition to TYPE TESTS, the MANUFACTURER of the ME EQUIPMENT can establish the testing interval and the extent of testing for periodic inspection and has to disclose it in the ACCOMPANYING DOCUMENTS. In establishing the testing interval, the following considerations should be taken into account:

   – the level of RISK of the ME EQUIPMENT as described in the RISK MANAGEMENT FILE,

   – the frequency of its use,

   – the operating environment,

   – type of ME EQUIPMENT (STATIONARY, MOBILE, emergency), and

   – the frequency of occurrence of device failures.

   If there is no information on the testing interval for periodic inspection in the ACCOMPANYING DOCUMENTS (e.g. for older ME EQUIPMENT), it can be established by a competent person. In defining the level of RISK, the above factors and the

IECNORM.COM : Click to view the full PDF of IEC TR 62354:2014

recommendations of the MANUFACTURER should be taken into account. The testing interval for periodic inspection can be set in the range of 6 months to 36 months.

j) In the event of the necessity for repairs or modifications after a failure or the likelihood of a failure during the sequence of tests, the testing laboratory and the supplier of the ME EQUIPMENT can agree, either upon the use of a new sample on which all relevant tests are to be carried out again or, preferably, upon making all the necessary repairs or modifications after which only relevant tests are repeated.

k) Unless otherwise specified in IEC 60601-1, ME EQUIPMENT is to be tested under the least favourable working conditions. The working conditions are specified in the ACCOMPANYING DOCUMENTS. The least favourable working conditions shall be documented for every test where they apply.

l) ME EQUIPMENT having operating values that can be adjusted or controlled by the OPERATOR is adjusted as part of the tests to values least favourable for the relevant test, but in accordance with the instructions for use.

m) If the test results are influenced by the inlet pressure and flow or chemical composition of the cooling liquid, the test is to be carried out within the limits for these characteristics as prescribed in the technical description.

n) Where cooling water is required, potable water is to be used.

o) Except in special cases, such as PATIENT supports and waterbeds, contact with ME EQUIPMENT is supposed to be made with:

– one hand, simulated for LEAKAGE CURRENT measurements by a metal foil of 10 cm × 20 cm (or less if the total ME EQUIPMENT is smaller);

– one finger, straight or bent in a natural position, simulated by a standard test finger (Figure F.1) provided with a stop plate; or

– an edge or slit that can be pulled outwards allowing subsequent entry of a finger, simulated by a combination of test hook (Figure F.2) and standard test finger.

10 Power sources for tests

10.1 General

a) Where test results are influenced by deviations of the supply voltage from its RATED value, the effect of such deviations is to be taken into account.

b) ME EQUIPMENT for a.c. only should be tested with a.c. at RATED frequency (if marked) ± 1 Hz for a RATED frequency between 0 Hz and 100 Hz and ± 1 % for a RATED frequency above 100 Hz. ME EQUIPMENT marked with a RATED frequency range is to be tested at the least favourable frequency within that range.

c) ME EQUIPMENT designed for more than one RATED voltage, or for both a.c. and d.c., is to be tested in conditions related to the least favourable voltage and nature of supply, for example, number of phases (except for single-phase supply) and type of current. It might be necessary to perform some tests more than once in order to establish which supply configuration is least favourable.

d) ME EQUIPMENT for d.c. only is to be tested with d.c. When performing the tests, the possible influence of polarity on the operation of the ME EQUIPMENT is to be taken into consideration.

e) Unless otherwise specified by this technical report, ME EQUIPMENT is to be tested at the least favourable RATED voltage within the relevant range. It might be necessary to perform some of the tests more than once in order to establish the least favourable voltage.

f) ME EQUIPMENT for which alternative ACCESSORIES or components specified by the MANUFACTURER are available is to be tested with those ACCESSORIES or components that give the least favourable conditions.

g) If the instructions for use specify that ME EQUIPMENT is intended to receive its power from a separate power supply, it is to be connected to such a power supply.

IECNORM.COM : Click to view the full PDF of IEC TR 62354:2014

10.2 Connection to a separate power source

If ME EQUIPMENT is specified for connection to a separate power source, other than the SUPPLY MAINS, either the separate power source should be considered as part of the ME EQUIPMENT and all relevant requirements of this standard should apply, or the combination should be considered as an ME SYSTEM.

NOTE What was formerly referred to, in the first and second editions of IEC 60601-1, as a "specified power supply" is now considered either as another part of the same ME EQUIPMENT or as another electrical equipment in an ME SYSTEM.

10.3 Connection to an external d.c. power source

If ME EQUIPMENT is specified for power supplied from an external d.c. power source, no HAZARD, other than absence of function, should develop when a connection with the wrong polarity is made and the ME EQUIPMENT should provide ESSENTIAL PERFORMANCE as described in the ACCOMPANYING DOCUMENTS when connection is subsequently made with the correct polarity.

NOTE The external d.c. power source can be a SUPPLY MAINS or another item of electrical equipment. In the latter case, the combination is considered to be an ME SYSTEM.

10.4 Source of power for ME EQUIPMENT

ME EQUIPMENT is either powered by an INTERNAL ELECTRICAL POWER SOURCE, specified for connection to a separate power supply, or is suitable for connection to SUPPLY MAINS, either independently or in combination, as long as only one connection to mains is provided. This is checked by inspection of the ACCOMPANYING DOCUMENTS.

10.5 SUPPLY MAINS for testing ME EQUIPMENT

SUPPLY MAINS used for testing ME EQUIPMENT have the following characteristics:

– voltage dips, short interruptions and voltage variations on the SUPPLY MAINS as described in IEC 60601-1-2;

– no voltage in excess of 110 % or lower than 90 % of the NOMINAL value between any of the conductors of the system or between any of these conductors and earth;

– voltages that are practically sinusoidal and forming a practically symmetrical supply system in case of polyphase supply;

– a frequency of not more than 1 kHz;

– a frequency deviation of ≤ 1 Hz from the NOMINAL value up to 100 Hz and ≤ 1 % from the NOMINAL value from 100 Hz to 1 kHz;

– the protective measures as described in IEC 60364-4-41.

NOTE If ME EQUIPMENT is intended to be operated from a SUPPLY MAINS with characteristics different from the SUPPLY MAINS described in this subclause, additional SAFETY measures might be necessary.

– a d.c. voltage (as measured by a moving coil meter or equivalent method) having a peak-to-peak ripple not exceeding 10 % of the average value.

Where peak-to-peak ripple exceeds 10 % of the average value, the peak voltage has to be applied.

The characteristics of electrical power source used to power the DUT should be evaluated as described in Annex L.

IECNORM.COM : Click to view the full PDF of IEC TR 62354:2014

11 Measurement and test equipment

11.1 General requirements

– The measurement and test equipment should comply with requirements of the IEC 61010 series of standards.

– In NORMAL USE the measurement equipment should not expose the person doing the testing or other individuals to unacceptable RISKS.

– The accuracy of the measuring functions within the range marked or declared by the measurement equipment manufacturer should be specified in the test data sheet. See also 11.2.

– The measurement equipment used for the tests should be tested and calibrated at regular intervals according to the information given by its manufacturer and should be traceable to national or international standards. Calibration should be performed by a calibration laboratory with a quality management system in accordance with ISO/IEC 17025.

– For the tests, PROTECTIVE EARTH CONNECTIONS can be interrupted in the measuring devices, if protection against electric shock is guaranteed by another means of IEC 61010-1.

– In the measurement equipment, an electrical separation of the measurement circuits, including measuring device (MD), from the SUPPLY MAINS including its PROTECTIVE EARTH CONDUCTOR should be guaranteed.

  Any connection to earth of the DUT can result in wrong measurement data. Therefore the set-up of the measurement equipment should ensure a galvanic separation from earth, or attention should be drawn to the necessity of isolated positioning of the DUT by an automatic warning or by a clearly visible marking.

– It is recommended to use dedicated test equipment (e.g. dielectric withstand tester, ground bonding and continuity tester, etc.).

– The test equipment should be capable of providing all voltages and currents needed for the range of tests to be performed (e.g. for dielectric testing: voltage and current; for ground bond: current and impedance).

– The test equipment should be easily adaptable to different test requirements. Most modern testers provide this flexibility through programmability plus an ability to recall previously stored test setups on demand.

– The test equipment should be designed so that normal variations in line voltage and connected load do not cause the output voltage and current measured at the DUT to rise above or fall below the levels required for the test. This improves test repeatability and greatly reduces inconsistencies in measurements.

– The test equipment should have a well-designed front panel with easily read digital displays of measurements, settings, and pass/fail indicators. Audible alarms are also desirable. An ability to hold an alarm condition after operator acknowledgment can be useful for later analysis of the fault. All panel items should be clearly marked so that the function of each is readily apparent to anyone looking at the test equipment for the first time.

– The START TEST button, where applicable, should be large, well marked, and protected in a way that prevents accidental activation of a test. The STOP TEST button, where applicable, should also be easily identified (preferably bright red) and placed so as to be quickly found in an emergency.

– Pushbuttons for setting, storing, or recalling test values, alarm limits, and test sequences should be clearly marked and easily operated by test personnel.

– Modern test equipment is equipped with some type of standard data communication interface for connection to remote data processing, computer, or control equipment. The typical interfaces are an IEEE-488 general-purpose interface bus and an RS232 serial communication line.

IECNORM.COM : Click to view the full PDF of IEC TR 62354:2014

11.2 Accuracy

The accuracy of the measurement and test equipment measurement range should meet the following typical specifications:

– voltage up to 1 000 V (d.c. up to 1 kHz): ±1,5 %;
– voltage, 1 000 V and above (d.c. up to 20 kHz): ±3 %;
– current up to 5 A (d.c. up to 60 Hz): ±1,5 %;
– current, 5 A and above (d.c. up to 5 kHz): ±2,5 %;
– LEAKAGE CURRENT: ±3,5 %;
– power above 1 W and up to 3 kW: ±3 %;
– power factor: ±0,05 %;
– frequency: ±0,2 %;
– resistance: ±5 %;
– temperature (thermocouple not included) below 100 °C: ±2 °C;
– temperature (thermocouple not included) 100 °C up to 500 °C: ±3 %;
– time, 1 s and above: ±1 %;
– linear dimensions up to 1 mm: ±0,05 mm;
– linear dimensions, 1 mm up to 25 mm: ±0,1 mm;
– linear dimensions, 25 mm and above: ±0,5 %;
– mass, 100 g up to 5 kg: ±2 %;
– mass, 5 kg and above: ±5 %;
– force: ±6 %;
– torque: ±10 %;
– angles: ±1 degree;
– relative humidity: ±6 % RH;
– barometric air pressure: ±0,01 MPa;
– gas and fluid pressure (for static measurement): ±5 %.

11.3 Safety criteria for selection

The measurement and test equipment should be selected so that the test operator cannot be accidentally subjected to hazardous voltages and currents such as those used for a dielectric strength test, a line voltage leakage test, or a protective earthing connection and continuity test. It is recommended to use measurement and test equipment which includes safety interlocks that provide protection by automatically shutting down the HIGH VOLTAGE output whenever a safety switch on the DUT is opened. Cables used for HIGH VOLTAGE output and ground clips should be flexible, well insulated, and able to be repeatedly plugged into and removed from the front panel over a long period of time without becoming frayed, worn, or ineffective.

11.4 Calibration

The reference standards (e.g. voltage, current, impedance) used by the equipment supplier for calibrating measurement and test equipment should be certified and traceable to national standards. This ensures sustained integrity of calibration accuracy and compliance with IEC/ISO 17025.

To establish uniform requirements for traceability of calibrations, calibration intervals and to ensure consistent and repeatable test results, reference the specifications included in Annex M.

IECNORM.COM : Click to view the full PDF of IEC TR 62354:2014

12 Treatments of unit symbols and measured values

Numeric indications of parameters are to be expressed in SI units according to ISO 31 except the base quantities listed in Table 1. These units can be expressed in the indicated units, which are outside the SI units system.

Table 1 – Units outside the SI units system that may be used

(IEC 60601-1:2005 + IEC 60601-1:2005/AMD1:2012, Table 1)

Base quantity	Unit	
	Name	**Symbol**
Plane angle	Revolution	r
	Grade	gon or grade
	Degree	°
	Minute of angle	′
	Second of angle	″
Time	Minute	min
	Hour	h
	Day	d
Energy	Electron volt	eV
Volume	Litre	l [a]
Pressure of respiratory gases, blood, and other body fluids	Millimetres of mercury	mmHg
	Centimetres of water	cmH_2O
Pressure of gases	Bar	bar
	Millibar	mbar

[a] For consistency, in international standards only the symbol "l" is used for litre, although the symbol "L" is also given in ISO 80000-1.

For application of SI units, their multiples and certain other units, ISO 80000-1 applies.

13 PROCEDURES for testing, including particular conditions

13.1 General

The following subclauses contain a framework for performing tests that are required by IEC 60601-1:2005. These are presented as a series of test PROCEDURES. They are divided into three groups:

– tests performed by inspection of the DUT;
– test performed with the DUT not energized; and
– tests performed with the DUT energized.

Each test PROCEDURE is written as a sheet describing:

a) equipment needed for the test;
b) safety precautions during the test;
c) test sample preparation;
d) test conditions;
e) test set-up and PROCEDURE; and

IECNORM.COM : Click to view the full PDF of IEC TR 62354:2014

f) presentation of the test results.

13.2 Tests to be performed by inspection

Table 2 lists those tests that are performed by inspection of the DUT.

Table 2 – Tests to be performed by inspection

Test per IEC/TR 62354		Clause in IEC 60601-1:1988	Clause in 60601-1:2005+AMD1:2012
No.	Description		
13.2.1	RISK MANAGEMENT PROCESS		4.2, 4.5
13.2.2	Ratings on critical components	56.1	4.8, 4.9, 11.3 and 15.4
13.2.3	Determination of APPLIED PARTS and ACCESSIBLE PARTS		4.6, 5.9, 8.4.2, 9.2.1
13.2.4	Durability and legibility of marking	6.1, 6.2	7.1.2, 7.1.3
13.2.5	Battery markings	6.8.2, 56.7	7.3.3, 15.4.3
13.2.6	PATIENT leads and PATIENT cables		8.5.2.3
13.2.7	Plugs, sockets		8.6.6
13.2.8	POTENTIAL EQUALIZATION TERMINAL	18	8.6.7
13.2.9	MAINS TERMINAL DEVICE	57.5 b)	8.11.4.2 e)
13.2.10	Sharp edges	23	9.3
13.2.11	HAZARDS associated with support systems	21.3	9.8.1, 9.8.3.1, 9.8.4, 9.8.5
13.2.12	Construction requirements for fire ENCLOSURE of ME EQUIPMENT		11.3
13.2.13	Marking, conductor colours, indicator lights and controls and ACCOMPANYING DOCUMENTS	6.1, 6.2, 6.3, 6.4, 6.6, 6.7, 6.8	7.2, 7.3, 7.4, 7.5, 7.6 ,7.7, 7.8, 7.9
13.2.14	USABILITY of ME EQUIPMENT		12.2, 15.1, 7.1.1

IECNORM.COM : Click to view the full PDF of IEC TR 62354:2014

13.2.1 RISK MANAGEMENT PROCESS

Standard(s)	Subclause(s):	13.2.1 RISK MANAGEMENT PROCESS
IEC 60601-1:2005+AMD1:2012	4.2, 4.5	

a) Equipment needed for the test: N/A, if not otherwise specified within the RISK MANAGEMENT FILE.

b) Safety precautions during the test: According to specification in the RISK MANAGEMENT FILE.

c) Test sample preparation:

One representative test sample.

If applicable according to the specification in the RISK MANAGEMENT FILE.

d) Test conditions:

If applicable according to the specification in the RISK MANAGEMENT FILE

e) Test set-up and PROCEDURE:

Inspection of the RISK MANAGEMENT FILE

If applicable according to the specification in the RISK MANAGEMENT FILE.

f) Presentation of the test results:

Subclause 4.2.2:

The MANUFACTURER **has/does not have** a policy for determining criteria for RISK acceptability;

The MANUFACTURER **has/ does not have** a RISK MANAGEMENT plan for the particular ME EQUIPMENT or ME SYSTEM under consideration; and

The MANUFACTURER **has/has not** prepared a RISK MANAGEMENT FILE containing the RISK MANAGEMENT RECORDS and other documentation required by this standard for the particular ME EQUIPMENT or ME SYSTEM under consideration.

The documents need to be in accordance with ISO 14971.

Subclause 4.2.3.1.a):

The MANUFACTURER **has/has not** provided OBJECTIVE EVIDENCE that requirements outside of the IEC 60601-1 series are adequate.

NOTE This clause is filled in within the RISK MANAGEMENT FILE only if the MANUFACTURER'S result indicates that requirements within IEC 60601-1 series are inadequate.

Subclause 4.2.3.1.b):

The MANUFACTURER **has/has not** provided RECORDS in the RISK MANAGEMENT FILE to demonstrate that, after applying the specific requirements of this standard, the acceptance criteria determined by the MANUFACTURER are satisfied.

Subclause 4.2.3.1.c):

The MANUFACTURER **has/has not** provided RECORDS in the RISK MANAGEMENT FILE demonstrate that the RESIDUAL RISK is acceptable using the criteria for RISK acceptability recorded in the RISK MANAGEMENT plan, i.e. no unacceptable RISK remains.

Subclause 4.2.3.2 (if applicable):

The MANUFACTURER **has/has not** provided RECORDS in the RISK MANAGEMENT FILE for HAZARDS or HAZARDOUS SITUATIONS that are identified for the particular ME EQUIPMENT or ME SYSTEM but are not specifically addressed in this standard or its collateral or particular standards.

Subclause 4.5 (if applicable):

The MANUFACTURER **has/has not** provided RECORDS in the RISK MANAGEMENT FILE that:

– an alternative RISK CONTROL measure or test method is acceptable;

– can demonstrate through scientific data or clinical opinion or comparative studies that:

- the RESIDUAL RISK that results from applying the alternative RISK CONTROL measure or test method remains acceptable, and
- is comparable to the RESIDUAL RISK that results from applying the requirements of this standard.

IECNORM.COM : Click to view the full PDF of IEC TR 62354:2014

13.2.2 Ratings on critical components

Standard(s): IEC 60601-1:2005	Subclause(s): 4.8, 4.9, 11.3 and 15.4	13.2.2 Ratings on critical components

a) Equipment needed for the test: N/A

b) Safety precautions during the test: N/A

c) Test sample preparation:

One representative test sample.

No preparation necessary.

d) Test conditions:

Do not energize the DUT during this test.

e) Test set-up and PROCEDURE:

Examine the circuit diagrams for the DUT to identify any critical components. Identify the types and manufacturers of these components using the parts lists. Obtain the data sheets and/or drawings from each manufacturer that are required to assess whether these components are working within their specified ratings. If the operating conditions cannot be established from the circuit analysis, then determine these ratings based on other tests e.g. heating test, WORKING VOLTAGE etc. Do not check flammability ratings of materials unless the MANUFACTURER has implemented a fire ENCLOSURE. In that case, only subject materials to flammability rating testing (according to Subclause 11.3 of IEC 60601-1:2005) that are either part of the fire ENCLOSURE or are inside the fire ENCLOSURE. This assessment should include the flammability rating of all plastics (i.e. PCBs, connectors, fans, insulators, bobbins, relay housings, plastic fuse holders, sleeving, insulated cables, plastic ENCLOSURES etc.).

Only plastics of sufficient size to influence the spread of fire need be assessed. Where several small amounts of a plastic are in the same vicinity then the cumulative effect should be taken into account.

f) Presentation of the test results:

TABLE: List of critical components

Object/ Part No	MANUFACTURER/ Trademark	Type / Model	Technical data	Operating within ratings (Y/N)	Standard	Mark(s) of conformity

TABLE: Resistance to fire

Item	Material/type	Manufacturer	Declared rating	Approval

IECNORM.COM : Click to view the full PDF of IEC TR 62354:2014

13.2.3 Determination of APPLIED PARTS and ACCESSIBLE PARTS

Standard(s): IEC 60601-1:2005+AMD1:2012	Subclause(s): 4.6, 5.9, 8.4.2, 9.2.1	13.2.3 Determination of APPLIED PARTS and ACCESSIBLE PARTS

a) Equipment needed for the test:

1) Unjointed test finger
2) Jointed test finger (Figure F.1)
3) Test pin (Figure F.3)
4) Force gauge
5) Weight
6) Test hook (Figure F.2)
7) Watch (indicating seconds)
8) Test rod

b) Safety precautions during the test:

Use normal laboratory safety PROCEDURES during this test.

c) Test sample preparation:

One representative test sample.

No preparation necessary.

d) Test conditions:

Do not energize the DUT during this test.

e) **Test set-up and PROCEDURE:**

1) Identify APPLIED PARTS by inspection of the ME EQUIPMENT and ACCOMPANYING DOCUMENTS. Determination of an ACCESSIBLE PART (electrical, hazardous moving, etc.) should be made using test probes (joined and/or rigid test finger, test pin, test hook, test rod). Refer also to Subclause 4.6 of IEC 60601-1:2005/AMD1:2012.
2) Apply the test fingers and pin without force unless a force is specified. Any parts that the test finger or test pin touches are considered to be accessible.
3) Apply the standard test finger in a bent or straight position:
   – to all positions of ME EQUIPMENT when operated as in NORMAL USE
   – if ME EQUIPMENT can be opened without the use of a TOOL or if the instructions for use describe opening, do this after opening ACCESS COVERS and removal of parts, including lamps, fuses and fuse holders.
4) Apply the standard test finger without appreciable force to all apertures in an attempt to contact hazardous parts (electrical or moving). Apply the test finger to the aperture's openings in every possible way. Do not tilt floor mounted ME EQUIPMENT that has a mass in any operational condition exceeding 45 kg.
5) Test ME EQUIPMENT which its technical description indicates should be mounted into a cabinet in its final mounting position.
6) Test openings into which the standard test finger cannot be put by inserting a straight, unjointed test finger with a force of 30 N. If the finger enters, repeat the test using the standard test finger by pushing the finger through the opening if necessary.
7) Insert the test hook in all relevant openings and the pull it with a force of 20 N for 10 s in a direction substantially perpendicular to the surface of the relevant opening. After applying the test hook, inspect the interior using the standard test finger.
8) Identify any additional parts that become accessible using the standard test finger and by inspection.

IECNORM.COM : Click to view the full PDF of IEC TR 62354:2014

13.2.3 Determination of APPLIED PARTS and ACCESSIBLE PARTS *(continued)*

Standard(s): IEC 60601-1:2005+AMD1:2012	Subclause(s): 4.6, 5.9, 8.4.2, 9.2.1	13.2.3 Determination of APPLIED PARTS and ACCESSIBLE PARTS

9) Conductive parts of actuating mechanisms of electrical controls that are accessible after removal of handles, knobs, levers and the like are regarded as ACCESSIBLE PARTS.

10) Conductive parts of actuating mechanisms are not considered accessible if removal of handles, knobs, etc. requires the use of a TOOL and inspection of the MANUFACTURER'S RISK MANAGEMENT FILE demonstrates the relevant part is unlikely to become detached unintentionally during the useful life of the ME EQUIPMENT.

11) Take any actions the OPERATOR should perform in NORMAL USE (with or without a TOOL) that increase the accessibility of parts (e.g. opening doors, removing covers, adjusting controls, replacing consumable material, removing parts).

12) For rack- and panel-mounted ME EQUIPMENT, install the ME EQUIPMENT according to the MANUFACTURER'S instructions. For such ME EQUIPMENT, the OPERATOR is assumed to be in front of the panel.

13) Other than contacts of plugs, connectors and socket outlets, the test pin does not contact parts other than those specified in Subclause 8.4.2 c) of IEC 60601-1:2005. Insert in all possible positions with a force up to 1 N.

14) Openings in the top or for the adjustment of preset controls are such that access with the test rod does not contact parts other than those specified in Subclause 8.4.2 c) of IEC 60601-1:2005. Insert in all possible positions with a force up to 10 N. If the instructions for use specify a different TOOL for the adjustment of preset controls, repeat the test using that TOOL.

f) Presentation of the test results:

List of APPLIED PARTS:

TABLE: APPLIED PARTS

Location	Remarks

IECNORM.COM : Click to view the full PDF of IEC TR 62354:2014

13.2.4 Durability and legibility of marking

Standard(s):	Subclause(s):	13.2.4 Durability and legibility of marking
IEC 60601-1:2005+AMD1:2012	7.1.2, 7.1.3	

a) Equipment needed for the test:

1) Cloth rag
2) Stop watch/clock (indicating seconds)
3) Distilled water
4) Ethanol 96 % as defined in the European Pharmacopoeia as a reagent in the following terms: C_2H_6O (MW46.07).
5) Isopropyl alcohol – Isopropyl alcohol is defined in the European Pharmacopoeia as a reagent in the following terms: C_3H_8O (MW60.1).
6) Light regulation means
7) Lux meter
8) 1 m / 30° gauge
9) Protective gloves

b) Safety precautions during the test:

Perform this test in a well-ventilated area.

Use appropriate protective gloves when conducting durability of markings test.

c) Test sample preparation:

One sample of marking nameplates attached to the DUT as specified by the MANUFACTURER.

d) Test conditions:

1) Consider the effect of NORMAL USE on markings while evaluating durability.
2) Do not energize the DUT during this test.

Marking location	
Use of marking	
Material	
Held by	
Applied surface material	

e) Test set-up and PROCEDURE:

1) Durability: Perform the rubbing test using distilled water, methylated spirit and isopropyl alcohol. Rub the markings by hand without undue pressure:
   – first for 15 s with a cloth rag soaked with distilled water,
   – then for 15 s with a cloth rag soaked with methylated spirit,
   – and then 15 s with a cloth rag soaked with isopropyl alcohol.
2) Legibility: Position the DUT or its part in the OPERATOR'S intended viewing position, or at any point within the base of a cone subtended by an angle of 30° to the axis normal to the centre of the plane of the marking and at a distance of 1 m. Select the least favourable ambient luminance level in the range of 100 lx to 1 500 lx. The observer who has a visual acuity, corrected if necessary, of 0 on the log minimum angle of resolution (log MAR) scale or 6/6 (20/20), and is able to read N6 of the Jaeger test card, in normal room lighting conditions (approximately 500 lx), needs to correctly perceive the marking from their position.

   The observer correctly perceives the marking from the viewpoint.

IECNORM.COM : Click to view the full PDF of IEC TR 62354:2014

13.2.4 Durability and legibility of marking *(continued)*

Standard(s): IEC 60601-1:2005+AMD1:2012	Subclause(s): 7.1.2, 7.1.3	13.2.4 Durability and legibility of marking

f) Presentation of the test results:

TABLE: Durability and legibility of marking				
Marking	**Legible (Y/N)**	**Curled (Y/N)**	**Edge lifted (Y/N)**	**Observation**

The marking **was/was not** damaged.

The label **was/was not** easily removed.

IECNORM.COM : Click to view the full PDF of IEC TR 62354:2014

13.2.5 Battery markings

Standard(s)	Subclause(s):	13.2.5 Batteries
IEC 60601-1:2005	7.3.3	

a) Equipment needed for the test: N/A

b) Safety precautions during the test: N/A

c) Test sample preparation:

One representative test sample.

No preparation necessary.

d) Test conditions:

Do not energize the DUT during this test.

e) Test set-up and PROCEDURE:

Visual inspection

f) Presentation of the test results:

The battery compartment **was/was not** marked with the type of battery and the mode of insertion (if applicable).

The battery compartment **was/was not** designed to prevent the RISK of accidentally short-circuiting the battery.

The battery compartment **was/was not** ventilated to minimize the RISK of accumulation and ignition when using batteries from which gases are likely to result in an unacceptable RISK if the gases escape during charging or discharging.

The compartment for batteries intended to be changed only by SERVICE PERSONNEL with the use of a TOOL **was/was not** marked with an identifying marking referring to information provided in the ACCOMPANYING DOCUMENTS.

The battery compartment **was/was not** marked with a warning indicating that only trained personnel can replace the batteries or fuel cells if the incorrect replacement would result in an unacceptable RISK.

Identifying marking referring to the ACCOMPANYING DOCUMENTS **was/was not** provided.

The design of the battery charging circuit **does/does not** prevent overcharging.

The primary lithium batteries (cells and assemblies of cells) used in ME EQUIPMENT **do/do not** comply with the marking requirements of IEC 60086-4.

The secondary lithium batteries (cells and assemblies of cells) used in ME EQUIPMENT **do/do not** comply with the marking requirements of IEC 62133.

The INTERNAL ELECTRICAL POWER SOURCE in ME EQUIPMENT **does/does not** provide an appropriately RATED device that protects against fire **due to** excessive current if the cross-sectional area and layout of the internal wiring or the rating of connected components can give rise to a fire in case of a short circuit.

Protective device(s) **have/do not have** the adequate breaking capacity to interrupt the maximum fault current (including short-circuit current) that can flow.

Justification for omission of fuses or OVER-CURRENT RELEASES **was/was not** included in the RISK MANAGEMENT FILE.

Means of preventing insertion or replacement of a battery incorrectly **was/was not** provided where an unacceptable RISK might occur.

IECNORM.COM : Click to view the full PDF of IEC TR 62354:2014

13.2.6 PATIENT leads or PATIENT cables

Standard(s):	Subclause(s):	13.2.6 PATIENT leads
IEC 60601-1:2005+AMD1:2012	8.5.2.3	

a) Equipment needed for the test:

1) Calliper
2) Unjointed test finger
3) Dielectric strength tester
4) Force gauge

b) Safety precautions during the test:

Use normal laboratory safety PROCEDURES during this test.

c) Test sample preparation:

One representative test sample.

No preparation necessary.

d) Test conditions:

1) Do not energize the DUT during this test.
2) This test applies to any connector for electrical connections on a PATIENT lead or cable containing a conductive part that is not separated from all PATIENT CONNECTION(S) by one MEANS OF PATIENT PROTECTION for a WORKING VOLTAGE equal to the MAXIMUM MAINS VOLTAGE. "Said part" refers to the "…conductive part of the connector that is not separated from all PATIENT connections…."

e) Test set-up and PROCEDURE:

The connector should be constructed so that said part cannot become connected to earth or a possible hazardous voltage while the PATIENT CONNECTION(S) contacts the PATIENT.

1) Verify whether said part comes into contact with a flat conductive plate.
2) Measure the AIR CLEARANCE between connector pins and a flat surface.
3) If said part can be plugged into a mains socket, said part should be protected from making contact with parts at MAINS VOLTAGE by at least one insulating means that provides a specified CREEPAGE DISTANCE and a dielectric strength of 1 500 V for 1 min.
4) Apply the straight unjointed test finger in the least favourable position against the access openings with a force of 10 N.

f) Presentation of the test results:

The said part **did/did not** come into contact with a flat conductive plate of not less than 100 mm diameter.

The AIR CLEARANCE between connector pins and a flat surface **was/was not** at least 0,5 mm.

If able to be plugged into a mains socket outlet, the insulating means **did/did not** provide a CREEPAGE DISTANCE of at least 1,0 mm.

If able to be plugged into a mains socket outlet, there **was/was no** indication of dielectric breakdown between the said part and the insulating means.

The rigid test finger **did/did not** make electrical contact with the said part.

IECNORM.COM : Click to view the full PDF of IEC TR 62354:2014

13.2.7 Plugs, sockets

Standard(s): IEC 60601-1:2005	Subclause(s): 8.6.6	13.2.7 Plugs, sockets
a) Equipment needed for the test: 1) Callipers		
b) Safety precautions during the test: Use normal laboratory safety PROCEDURES during this test.		
c) Test sample preparation: One representative test sample. No preparation necessary.		
d) Test conditions: Do not energize the DUT during this test. This test applies where the connection between the SUPPLY MAINS and the DUT or between separate parts of the DUT that can be operated by the OPERATOR is made via a plug and socket device. This also applies if interchangeable parts are PROTECTIVELY EARTHED.		
e) Test set-up and PROCEDURE: Visual inspection and dimensional measurement of the connector pins.		
f) Presentation of the test results: The PROTECTIVE EARTH CONNECTION **was/was not** made before and interrupted after the supply connections were made or interrupted.		

IECNORM.COM : Click to view the full PDF of IEC TR 62354:2014

13.2.8 POTENTIAL EQUALIZATION TERMINAL

Standard(s): IEC 60601-1:2005+AMD1:2012	Subclause(s): 8.6.7	13.2.8 POTENTIAL EQUALIZATION TERMINAL

a) Equipment needed for the test: N/A

b) Safety precautions during the test:

Use normal laboratory safety PROCEDURES during this test.

c) Test sample preparation:

One representative test sample.

No preparation necessary.

d) Test conditions:

Do not energize the DUT during this test.

This test applies to ME EQUIPMENT that provides a terminal for the connection of a POTENTIAL EQUALIZATION CONDUCTOR.

e) Test set-up and PROCEDURE:

Visual inspection.

f) Presentation of the test results:

The terminal **was/was not** accessible to the OPERATOR with the DUT in any of its possible NORMAL USE positions.

Accidental disconnection **was/was not** avoided in NORMAL USE.

The terminal **does/does not** allow the conductor to be detached without the use of a TOOL.

The terminal **was /was not** used for a PROTECTIVE EARTH CONNECTION.

The terminal **was/was not** marked with symbol IEC 60417-5021(2002-10).

The instruction for use **does/does not** contain information on the function and use of the POTENTIAL EQUALIZATION CONDUCTOR together with a reference to the requirements of IEC 60601-1:2005 for ME SYSTEMS.

The POWER SUPPLY CORD **does /does not** incorporate a POTENTIAL EQUALIZATION CONDUCTOR.

IECNORM.COM : Click to view the full PDF of IEC TR 62354:2014

13.2.9 MAINS TERMINAL DEVICE

Standard(s): IEC 60601-1:2005	Subclause(s): 8.11.4.2 e)	13.2.9 MAINS TERMINAL DEVICE

a) Equipment needed for the test:

1) Calliper

b) Safety precautions during the test:

Use normal laboratory safety PROCEDURES during this test.

c) Test sample preparation:

Stripping of insulation.

d) Test conditions:

Do not energize the DUT during this test.

e) Test set-up and PROCEDURE:

1) Strip 8 mm of insulation off of the end of a flexible conductor that has a cross-sectional area as specified in Table 3 and that is used for connection to a MAINS TERMINAL DEVICE.

Table 3 – NOMINAL cross-sectional area of conductors of a POWER SUPPLY CORD

(IEC 60601-1:2005, Table 17)

RATED current (*I*) of ME EQUIPMENT A	NOMINAL cross-sectional area mm^2 Cu
$I \leq 6$	0,75
$6 < I \leq 10$	1
$10 < I \leq 16$	1,5
$16 < I \leq 25$	2,5
$25 < I \leq 32$	4
$32 < I \leq 40$	6
$40 < I \leq 63$	10

2) Leave a single wire of the stranded conductor free and secure the rest of the conductor to the terminal to simulate a fully introduced conductor.

3) Bend the free wire in every possible direction without pulling back the insulating sheath and without making sharp bends around partitions.

4) Any contact between the free wire and any other part that short-circuits a MEANS OF PROTECTION constitutes a failure.

IECNORM.COM : Click to view the full PDF of IEC TR 62354:2014

13.2.9 MAINS TERMINAL DEVICE *(continued)*

Standard(s): IEC 60601-1:2005	Subclause(s): 8.11.4.2 e)	13.2.9 MAINS TERMINAL DEVICE

f) Presentation of the test results:

TABLE: MAINS TERMINAL DEVICE		
Conductor stripped:	**Contact to other parts:**	**MEANS OF PROTECTION short-circuited: Yes/No**

IECNORM.COM : Click to view the full PDF of IEC TR 62354:2014

13.2.10 Sharp edges

Standard(s):	Subclause(s):	13.2.10 Sharp edges
IEC 60601-1:2005+AMD1:2012	9.3	

a) Equipment needed for the test: N/A

b) Safety precautions during the test:

Use normal laboratory safety PROCEDURES during this test.

c) Test sample preparation:

One representative sample with fully loaded options/ACCESSORIES, consisting of the complete ENCLOSURE in its normal position.

d) Test conditions:

Accessible edges or corners of the DUT, except those required for proper functioning of the ME EQUIPMENT were assessed.

Do not energize the DUT during this test.

e) Test set-up and PROCEDURE:

Surfaces described below are judged for sharp edges.

Surface	Material	Observations

f) Presentation of the test results:

TABLE: Sharp edges	
Edge location	Unacceptable RISK present Yes/No

The edges and corners **were/were not** considered to be rounded and smooth.

The HAZARDS related to sharp edges **are/are not** included in the RISK MANAGEMENT FILE.

IECNORM.COM : Click to view the full PDF of IEC TR 62354:2014

13.2.11 HAZARDS associated with support systems

Standard(s): IEC 60601-1:2005+AMD1:2012	Subclause(s): 9.8.1, 9.8.3.1, 9.8.4, 9.8.5	13.2.11 HAZARDS associated with support systems

a) Equipment needed for the test: N/A

b) Safety precautions during the test:

Use normal laboratory safety PROCEDURES during this test.

c) Test sample preparation:

One representative sample with fully loaded options/ACCESSORIES, consisting of the complete ENCLOSURE in its normal position.

d) Test conditions:

Do not energize the DUT during this test.

e) Test set-up and PROCEDURE:

The DUT is evaluated for HAZARDS associated with support systems based on visual inspection of the ME EQUIPMENT and on inspection of the documentation provided.

f) Presentation of the test results:

The construction of the support, suspension or actuation system **is/is not** designed based upon determination of TENSILE SAFETY FACTOR and the TOTAL LOAD.

Means of attachment of ACCESSORIES **are/are not** designed such that any possibility of incorrect attachment that could result in an unacceptable RISK is avoided.

The RISK ANALYSIS of support systems **does/does not** consider HAZARDS arising from static, dynamic, vibration, impact and pressure loading, foundation and other movements, temperature, environmental, manufacture and service conditions.

All likely failure effects **were/were not** considered in the RISK ANALYSIS. These include excessive deflection, plastic deformation, ductile or brittle fracture, fatigue fracture, instability (buckling), stress-assisted corrosion cracking, wear, material creep, material deterioration and residual stresses resulting from the manufacturing PROCESSES, e.g. machining, assembling, welding, heat treatment or surface coating.

The ACCOMPANYING DOCUMENTS **contain/do not contain** instructions on attachment of structures to a floor, wall, ceiling, etc. making adequate allowances for quality of the materials used to make the connection and list the required materials. Additionally **advice/no advice** on checking the adequacy of the surface of the structure to which the parts will be attached. Additionally, the ACCOMPANYING DOCUMENTS **provide/do not provide** instructions that once the MECHANICAL PROTECTIVE DEVICE has been activated, SERVICE PERSONNEL are to be called and the MECHANICAL PROTECTIVE DEVICE has to be replaced before the ME EQUIPMENT can be used again.

The DUT **is/is not** marked properly.

The DUT **does/does not** require a MECHANICAL PROTECTIVE DEVICE.

Where required, the MECHANICAL PROTECTIVE DEVICE **is/is not** designed on the basis of TOTAL LOAD, which includes SAFE WORKING LOAD when applicable.

IECNORM.COM : Click to view the full PDF of IEC TR 62354:2014

13.2.11 HAZARDS associated with support systems *(continued)*

Standard(s): IEC 60601-1:2005+AMD1:2012	Subclause(s): 9.8.1, 9.8.3.1, 9.8.4, 9.8.5	13.2.11 HAZARDS associated with support systems
The MECHANICAL PROTECTIVE DEVICE **has/does not have** the TENSILE SAFETY FACTORS for all parts correct selected. The MECHANICAL PROTECTIVE DEVICE **activates/does not activate** before travel (movement) produces an unacceptable RISK. The MECHANICAL PROTECTIVE DEVICE **takes into account/does not account for** continuous activation and MECHANICAL PROTECTIVE DEVICE intended for single activation. It **did/did not** become obvious that the MECHANICAL PROTECTIVE DEVICE has been activated. The MECHANICAL PROTECTIVE DEVICE **requires/does not require** the use of a TOOL to be reset or replaced. Further use of the ME EQUIPMENT **is/is not** impossible until the MECHANICAL PROTECTIVE DEVICE has been replaced. The marking **is/is not** adjacent to the MECHANICAL PROTECTIVE DEVICE or so located that its relation to the MECHANICAL PROTECTIVE DEVICE is obvious to the person performing service or repair. There **was / was no** damage to the MECHANICAL PROTECTIVE DEVICE that would affect its ability to perform its intended function. Support system parts **are/are not** impaired by wear.		

IECNORM.COM : Click to view the full PDF of IEC TR 62354:2014

13.2.12 Construction requirements for fire ENCLOSURE of ME EQUIPMENT

Standard(s): IEC 60601-1:2005	Subclause(s): 11.3	13.2.12 Construction requirements for fire ENCLOSURE of ME EQUIPMENT

a) Equipment needed for the test:

1) Calliper
2) Metric gauge pins
3) Inclinometer

b) Safety precautions during the test:

Use normal laboratory safety PROCEDURES during this test.

c) Test sample preparation:

One representative test sample.

d) Test conditions:

Do not energize the DUT during this test.

e) Test set-up and PROCEDURE:

1) Flammability ratings of materials are to be checked only where the MANUFACTURER has implemented a fire ENCLOSURE and only if the materials used as part of the fire ENCLOSURE or inside of the fire ENCLOSURE are subject to flammability rating requirements according to Subclause 11.3 of
IEC 60601-1:2005. Part of this assessment should include the flammability rating of all plastics (i.e. PCBs, connectors, fans, insulators, bobbins, relay housings, plastic fuse holders, sleeving, insulated cables, insulated wire, plastic ENCLOSURES, etc).

   NOTE Only plastics of sufficient size to influence the spread of fire need be assessed Where several small amounts of a plastic are in the same vicinity then the cumulative effect should be taken into account.

2) Inspect bottom and side ENCLOSURE openings in accordance with Subclause 11.3.b) 1) and 2) of IEC 60601-1:2005.
3) Inspect the ENCLOSURE and any baffle or flame barrier in accordance with Subclause 11.3 b) 3) of IEC 60601-1:2005.

f) Presentation of the test results:

TABLE: Resistance to fire			
Item	**Material/type**	**Manufacturer**	**Flame rating**

Insulated wire used within a fire ENCLOSURE **has/does not have** a flammability rating of FV-1 or better;

Connectors, printed circuit boards and insulating material on which components are mounted **have/do not have** a flammability classification of FV-2 or better.

IECNORM.COM : Click to view the full PDF of IEC TR 62354:2014

13.2.12 Construction requirements for fire ENCLOSURE of ME EQUIPMENT *(continued)*

Standard(s):	Subclause(s):	13.2.12 Construction requirements for fire ENCLOSURE of ME EQUIPMENT
IEC 60601-1:2005	11.3	

The bottom **has no openings/has openings** complying with Figure 1 constructed with baffles according to Figure 2 or is made of metal perforated according to Table 4 or is made with a metal screen with a mesh not exceeding 2 mm by 2 mm center to center and a wire diameter of at least 0,45 mm.

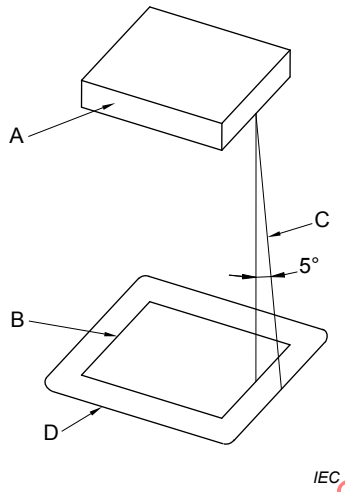

Key

A Part or component of the ME EQUIPMENT that is considered to be a source of fire. This consists of an entire component or part of the ME EQUIPMENT if it is not otherwise shielded, or the unshielded portion of a component that is partially shielded by its casing.

B Projection of the outline of A on the horizontal plane.

C Inclined line that traces out the minimum area of the bottom and sides to be constructed as specified in 11.3 b) 1*)* and 11.3 b) 2). This line projects at a 5° angle from the vertical at every point around the perimeter of A and is oriented so as to trace out the maximum area.

D Minimum area of the bottom to be constructed as specified in 11.3 b) 1) [of the General Standard].

Figure 1 – Area of the bottom of an ENCLOSURE as specified in 11.3 b) 1)

(IEC 60601-1:2005, Figure 39)

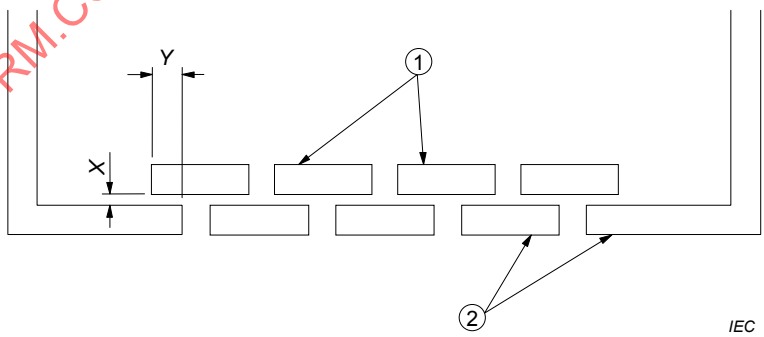

Y = twice *X* but never less than 25 mm

(1) Baffle plates (may be below the bottom of the ENCLOSURE)

(2) Bottom of the ENCLOSURE

Figure 2 – Baffle

(IEC 60601-1:2005, Figure 38)

IECNORM.COM : Click to view the full PDF of IEC TR 62354:2014

13.2.12 Construction requirements for fire ENCLOSURE of ME EQUIPMENT *(continued)*

Standard(s): IEC 60601-1:2005	Subclause(s): 11.3	13.2.12 Construction requirements for fire ENCLOSURE of ME EQUIPMENT

Table 4 – Acceptable perforation of the bottom of an ENCLOSURE

(IEC 60601-1:2005, Table 25)

Minimum thickness mm	Maximum diameter of holes mm	Minimum spacing of holes centre to centre mm
0,66	1,14	1,70 (233 holes/645 mm^2)
0,66	1,19	2,36
0,76	1.15	1,70
0,76	1,19	2,36
0,81	1,91	3,18 (72 holes/645 mm^2)
0,89	1,90	3,18
0,91	1,60	2,77
0,91	1,98	3,18
1,00	1,60	2,77
1,00	2,00	3,00

Sides **have no/have** openings within the area that is included within the incline line C in Figure 1.

The ENCLOSURE, any baffle or flame barrier **is/is not** made of metal (except magnesium) or non-metallic materials RATED FV-2 or better for TRANSPORTABLE ME EQUIPMENT and FV-1 or better for FIXED or STATIONARY ME EQUIPMENT. For constructions according to Table 4 and metal screen mesh, see above.

IECNORM.COM : Click to view the full PDF of IEC TR 62354:2014

13.2.13 Marking, conductor colours, indicator lights and controls and ACCOMPANYING DOCUMENTS

Standard(s) IEC 60601-1:2005+AMD1:2012	Subclause(s): 7.2, 7.3, 7.4, 7.5, 7.6, 7.7, 7.8, 7.9	13.2.13 Marking, conductor colours, indicator lights and controls and ACCOMPANYING DOCUMENTS
a) Equipment needed for the test: N/A		
b) Safety precautions during the test: N/A		
c) Test sample preparation: One representative test sample. No preparation necessary.		
d) Test conditions: Do not energize the DUT during this test. Evaluate the marking and the ACCOMPANYING DOCUMENTS provided with the DUT.		
e) Test set-up and PROCEDURE: Evaluate the markings on the DUT, the colours of insulation and indicators and controls, and the ACCOMPANYING DOCUMENTS provided with the DUT against the requirements in the standard.		
f) Presentation of the test results: 1) IEC 60601-1:1988: The markings on the outside of ME EQUIPMENT or ME EQUIPMENT parts **do/do not** satisfy the requirements of Subclause 6.1. The markings on the inside of ME EQUIPMENT or ME EQUIPMENT parts **do/do not** satisfy the requirements of Subclause 6.2. The marking of controls and instruments **do/do not** satisfy the requirements of Subclause 6.3. Any symbols **do/do not** satisfy the requirements of Subclause 6.4. The colours of the insulation of conductors **do/do not** satisfy the requirements of Subclause 6.5. The colours of indicator lights and controls **do/do not** satisfy the requirements of Subclause 6.7. The ACCOMPANYING DOCUMENTS **do/do not** satisfy the requirements of Subclause 6.8.		
2) IEC 60601-1:2005 + IEC 60601-1:2005/AMD1:2012: The markings on the outside of ME EQUIPMENT or ME EQUIPMENT parts **do/do not** satisfy the requirements of Subclause 7.2. The markings on the inside of ME EQUIPMENT or ME EQUIPMENT parts **do/do not** satisfy the requirements of Subclause 7.3. The marking of controls and instruments **do/do not** satisfy the requirements of Subclause 7.4. Any safety signs **do/do not** satisfy the requirements of Subclause 7.5. Any symbols **do/do not** satisfy the requirements of Subclause 7.6. The colours of the insulation of conductors **do/do not** satisfy the requirements of Subclause 7.7. The colours of indicator lights and controls **do/do not** satisfy the requirements of Subclause 7.8. The ACCOMPANYING DOCUMENTS **do/do not** satisfy the requirements of Subclause 7.9.		

IECNORM.COM : Click to view the full PDF of IEC TR 62354:2014

13.2.14 USABILITY of ME EQUIPMENT

Standard(s)	Subclause(s):	13.2.14 Usability of ME EQUIPMENT
IEC 60601-1:2005+AMD1:2012	12.2, 15.1, 7.1.1	

a) Equipment needed for the test: N/A

b) Safety precautions during the test: N/A

c) Test sample preparation:

No preparation necessary.

d) Test conditions: N/A.

e) Test set-up and PROCEDURE:

Evidence of compliance with this subclause and all requirements of this standard referring to inspection of the USABILITY ENGINEERING file are satisfied if the MANUFACTURER has:

– established a USABILITY ENGINEERING PROCESS;
– established acceptance criteria for USABILITY; and
– demonstrated that the acceptance criteria for USABILITY have been met.

f) Presentation of the test results:

The MANUFACTURER **has/has not** elaborated a USABILITY ENGINEERING file.

The MANUFACTURER **has/has not** elaborated a USABILITY specifications document.

The MANUFACTURER **has/has not** established a USABILITY validation plan

The MANUFACTURER **has/has not** identified known or foreseeable HAZARDS related to USABILITY, analysed these HAZARDS according ISO 14971 and are included in the RISK MANAGEMENT FILE.

IECNORM.COM : Click to view the full PDF of IEC TR 62354:2014

13.3 Measurements and tests performed on non-energized equipment

Table 5 lists those measurements and tests that are performed on a non-energized DUT.

Table 5 – Measurements and tests performed on non-energized equipment

Test per IEC/TR 62354		Clause in IEC 60601-1:1988	Clause in 60601-1:2005
No.	Description		
13.3.1	Humidity preconditioning	4.10, 44.5	5.7
13.3.2	Impedance of PE connection	18 f)	8.6.4
13.3.3	Dielectric strength	20.4	8.8.3
13.3.4	Ball pressure	59.2 b)	8.8.4.1
13.3.5	Resistance to environmental stress		8.8.4.2
13.3.6	Thermal cycling		8.9.3.4
13.3.7	CREEPAGE DISTANCES and AIR CLEARANCES	59.2	8.9.4
13.3.8	Strain relief (cord anchorage)	57.4 a)	8.11.3.5
13.3.9	Cord guard flexing (cord bending)	57.4 b)	8.11.3.6
13.3.10	Access to hazardous moving parts		9.2.1
13.3.11	Gaps		9.2.2.2
13.3.12	Instability(in transport position; excluding transport; from horizontal and vertical forces and from unwanted lateral movement)	24	9.4.2.1, 9.4.2.2, 9.4.2.3, 9.4.3.1, 9.4.3.2
13.3.13	Castors and wheels (force for propulsion, movement over a threshold)		9.4.2.4.2, 9.4.2.4.3
13.3.14	Handle loading	21 c)	9.4.4
13.3.15	Safety catch evaluation	28.3	9.8.1, 9.8.2
13.3.16	Support loading	28.4	9.8.3
13.3.17	Overflow	44.2	11.6.2
13.3.18	Spillage	44.3	11.6.3
13.3.19	Leakage	44.4	11.6.4, 13.2.6
13.3.20	Ingress of water or particulate matter	44.6	11.6.5
13.3.21	Cleaning, sterilization and disinfection	44.7	11.6.6, 11.6.7
13.3.22	Push (rigidity)	21	15.3.2
13.3.23	Impact	21; 22	15.3.3
13.3.24	Drop impact	21.5; 21.6	15.3.4
13.3.25	Rough handling	21.6	15.3.5, 9.4.2.4.3
13.3.26	Mould stress relief		15.3.6
13.3.27	Actuating parts of controls (Knob pull and limitation of movement)	56.10 b) and c)	15.4.6.1, 15.4.6.2
13.3.28	Construction of transformers		15.5.3

IECNORM.COM : Click to view the full PDF of IEC TR 62354:2014

13.3.1 Humidity preconditioning

Standard(s):	Subclause(s):	13.3.1 Humidity preconditioning
IEC 60601-1:2005+AMD1:2012	5.7	

a) Equipment needed for the test:

1) Environment chamber with control over humidity in the range of (93 ± 3) % relative humidity (RH) and temperature in the range of (20 ± 2) °C to (30 ± 2) °C

2) Relative humidity and temperature recording equipment

b) Safety precautions during the test:

Use normal laboratory safety PROCEDURES during this test.

c) Test sample preparation:

This test is to be applied only to those ME EQUIPMENT parts likely to be influenced by the climatic conditions that are simulated by the test.

One representative test sample.

Prior to conditioning, parts of the DUT (covers) that could be removed without the use of TOOLS were removed and separately placed in the chamber.

During conditioning, cable entrances and/or a conduit opening were left open.

Do not energize the DUT during this test.

d) Test conditions:

A humidity chamber having relative humidity of 93 % ± 2 % is set to any convenient temperature (T) between 20 °C and 32 °C. The DUT, before being placed in the chamber, is brought to a temperature between T and (T + 4) °C and kept at this temperature for a minimum of 4 h.

e) Test set-up and PROCEDURE:

1) Place the DUT in the humidity chamber and kept it there for:

– 2 days (48 h) for ordinary (IPX0) ME EQUIPMENT or ME EQUIPMENT parts.

– 7 days (168 h) for IPX1 – IPX8 .

– If the RISK MANAGEMENT PROCESS suggests that the ME EQUIPMENT might be exposed to high humidity for extended periods (such as ME EQUIPMENT intended for out-door use), the period should be extended appropriately (for IEC 60601-1:2005 only).

During this time the temperature of the air in the chamber is maintained at T ± 2 °C.

2) While still in the humidity chamber, but after all parts have been placed back on the DUT, the dielectric strength test according to Subclause 13.3.3 of IEC 60601-1:2005 should be performed for a period of 1 min between applicable parts.

3) Then the DUT is removed from the chamber, placed in a normal environment (temperature approximately T, humidity 45 % – 65 %) and 1 h later (for the IEC 60601-1:1988 only) LEAKAGE CURRENT tests are performed according to Subclauses 13.4.7 – 13.4.12 of IEC 60601-1:2005.

f) Presentation of the test results:TABLE: Humidity preconditioning

Identification of ME EQUIPMENT and its parts/IP rating	Soak temperature °C	Soak humidity % RH	Soak duration h	Remarks

IECNORM.COM : Click to view the full PDF of IEC TR 62354:2014

13.3.2 Impedance of PE connection

Standard(s):	Subclause(s):	13.3.2 Impedance of PE connection
IEC 60601-1:2005+AMD1:2012	8.6.4	

a) Equipment requested for the testing:

1) Adjustable a.c. current source with a frequency of 50 Hz,60 Hz or d.c. and with a no-load voltage not exceeding 6 V, which is able to produce 25 A or 1,5 times the highest RATED current of the relevant circuit(s), whichever is greater (± 10 %)
2) Suitable voltmeter and ammeter
3) Assorted connectors and cables
4) Shunt, or
5) Ground bond tester

b) Safety precautions during the test:

Use normal laboratory safety PROCEDURES during this test.

High current testing can cause excessive localized heating of conductive parts and possible burns. An operator wearing conductive jewellery needs to take precautions to ensure contact with the high current test circuit is prevented.

c) Test sample preparation:

One representative test sample.

d) Test conditions:

Do not energize the DUT during this test.

e) Test set-up and PROCEDURE:

1) A test current of 25 A or 1,5 times the highest RATED current of the relevant circuit(s), whichever is greater (± 10 %), from a current source with a frequency of 50 Hz , 60 Hz or d.c. and with a no-load voltage not exceeding 6 V, is passed for 5 s to 10 s through:
   – the PROTECTIVE EARTH TERMINAL or the protective earth contact in the APPLIANCE INLET or the protective earth pin in the MAINS PLUG and each PROTECTIVELY EARTHED part
   – each protectively earthed part or the MAINS PLUG of any DETACHABLE POWER SUPPLY CORD supplied or specified by the MANUFACTURER, when attached to the ME EQUIPMENT, and any part of the ME EQUIPMENT that is PROTECTIVELY EARTHED.

   Where a DETACHABLE POWER SUPPLY CORD is neither supplied nor specified, test using a 3 m long cord of appropriate cross sectional area based on IEC 60601-1:2005+AMD1:2012 clause 8.11.3.3 and Table 17.
2) The voltage drop between the earth terminal and the part to be earthed is measured, and the resistance between these two points is to be calculated.
3) The test instrument leads impedance should be considered.

f) Presentation of the test results:

TABLE: Impedance of PE connection

Test location	Test current (I) A	Duration s	Measured voltage (U) V	Resistance (R) Ω

$R = U/I$

The calculated resistance:

( ) did not exceed **100 mΩ** for PERMANENTLY INSTALLED ME EQUIPMENT, and for ME EQUIPMENT with an APPLIANCE INLET;

( ) did not exceed **200 mΩ** for ME EQUIPMENT with a non-DETACHABLE POWER SUPPLY CORD.

IECNORM.COM : Click to view the full PDF of IEC TR 62354:2014

13.3.3 Dielectric strength

Standard(s):	Subclause(s):	13.3.3 Dielectric strength
IEC 60601-1:2005+AMD1:2012	8.8.3	

a) Equipment needed for the test:

Dielectric strength a.c. and/or d.c tester (HiPot) as appropriate.

In order to ensure standardized control of test voltage in time, testers with program controlled test voltage are recommended. Manual adjustment of the test voltage in certain circumstances can be valuable.

The test equipment should display the current measurement through the insulation.

Alternatively, where needed, current can be measured using an ammeter in series providing it has sufficient protection against the HIGH VOLTAGE of the test. Adding series connected impedances can protect the ammeter from HIGH VOLTAGE. For older dielectric strength test equipment, any means to measure ramp time (stop watch, watch or clock) can be used.

Provide elements ensure spatial separation between test operator and DUT located together with eventual auxiliary measuring devices in HIGH VOLTAGE area.

b) Safety precautions during the test:

The DUT, test equipment, test leads and any auxiliary equipment and components should not be accessible upon commencement of the HIGH VOLTAGE.

Provide adequate markings and warnings at the testing location. Give special consideration to the possibility someone might come into contact with the HIGH VOLTAGE.

Design the test station so that accidental touching of parts at HIGH VOLTAGE is not possible.

Test operators should not be able to keep test probes in their hands during HIGH VOLTAGE activation.

Put precautions in place to prevent conductive liquids from being near the test station.

Take steps (including training) to ensure that the test operator is not distracted during the test. (Conversations with others or telephone calls for example).

Test operator(s) are properly trained, authorized and physically/mentally able to perform the test.

c) Test sample preparation:

1) The configuration(s) of the DUT must allow all safety insulations to be tested according to the insulation diagram.
2) Observe standard requirements that allow for short-circuiting of either circuit side of the electrical test node and the removal of specified components.
3) When testing across more than one safety insulation, give consideration to the effects different impedances have on the safety insulation involved and over-voltage stressing of particular safety insulation in the test circuit path. In such test situations, a separate test of each safety insulation using the applicable dielectric strength test voltage might be necessary.
4) Tightly cover ENCLOSURES or their parts made of non-conductive material with foil. Place foil so that it does not bridge the safety insulation under test but does test all applicable areas.
5) The surface of cables and lead wires connected to the DUT should be treated as parts of the DUT ENCLOSURE.
6) The surface of mains power cords can be exempt from wrapping with foil and inclusion as an electrical test node based on relevant analysis of the component.

IECNORM.COM : Click to view the full PDF of IEC TR 62354:2014

13.3.3 Dielectric strength *(continued)*

Standard(s):	Subclause(s):	13.3.3 Dielectric strength
IEC 60601-1:2005+AMD1:2012	8.8.3	

d) Test conditions:

Connect test circuits (switches and relay contacts closed) and do not energize the DUT. If necessary (to prevent battery powered DUT's from being energized), use a solid piece of insulation to block one pole of the battery.

Perform testing immediately after humidity preconditioning treatment, after any required sterilization PROCEDURE, and after reaching the steady state operating from the excessive temperature test.

e) Test set-up and PROCEDURE:

1) Prior to the test, discuss the equipment design, insulation diagram and appropriate test strategy with the MANUFACTURER. Determine the dielectric strength voltage and waveform to be applied across each safety insulation and circuit arrangement including any components to be removed and any circuits to be short-circuited.

2) Where appropriate, apply two MEANS OF PROTECTION according to IEC/TR 60513.

3) Perform the testing across the single MEANS OF PROTECTION safety insulation prior to the two MEANS OF PROTECTION safety insulation.

4) Perform each dielectric strength test in the sequence by applying not more than half the test voltage, then ramping the voltage over a 10 s period, holding for 1 min and ramping over a 10 s period to less than half the test voltage.

5) Breakdown (current that rapidly increases in an uncontrolled manner) constitutes a failure. Corona discharge or a single momentary flashover is not regarded as insulation breakdown.

6) Observing the linear relationship between a change in the dielectric strength test voltage to change in current through the safety insulation can provide useful information about the safety insulation.

f) Presentation of the test results:

There **was/was no** indication of dielectric breakdown.

TABLE: Dielectric strength

Insulation under test (area from insulation diagram)	Insulation type: (BI-BASIC / SI-SUPPLEMENTARY / DI-DOUBLE / RI-REINFORCED) (for IEC 60601-1:1988) (Functional / one MOOP / two MOOP / one MOPP/ two MOPP) (for IEC 60601-1:2005)	WORKING VOLTAGE V	Test voltage V	Remarks

IECNORM.COM : Click to view the full PDF of IEC TR 62354:2014

13.3.4 Ball pressure

Standard(s):	Subclause(s):	13.3.4 Ball pressure
IEC 60601-1:2005+AMD1:2012	8.8.4.1	

a) Equipment needed for the test:

1) Ball pressure apparatus (Figure F.4)
2) Heating cabinet with temperature measuring device
3) Calliper with magnifying feature or additional magnifying equipment
4) Watch/clock
5) Support for specimen with place to embed thermocouple

b) Safety precautions during the test:

No special safety precaution required.

c) Test sample preparation:

Special preparation of the insulating material might be necessary in order to be able to perform the test.

The thickness of the material to be tested should be at least 2,5 mm (radius of the ball).

d) Test conditions:

The temperature in the heating cabinet should be brought up to a temperature related to the use of the insulating material. For example:

– 75 ± 2 °C or maximum ambient operating temperature specified in the technical description ± 2 °C plus the temperature rise that was determined during the test for normal heating (test 13.4.17) of the relevant part of the insulating material, whichever is the higher (for parts of the ENCLOSURE and other external insulating parts); or

– 125 °C ± 2 °C or maximum ambient operating temperature specified in the technical description ± 2 °C plus the temperature rise that was determined during the test for normal heating (test 13.4.17) of the relevant part of the insulating material, whichever is the higher (for parts of insulating material which support uninsulated parts of the MAINS PART).

e) Test set-up and PROCEDURE:

1) The heating cabinet is brought up to the pre-determined temperature. The cabinet temperature should be uniform and maintained for 1 h.
2) The insulating material to be tested is placed in the cabinet on a solid horizontal support.
3) The ball pressure apparatus is placed upon the insulating material to be tested.
4) The ball is withdrawn after 1 h and the diameter of the impression made by the ball is measured with a slide calliper.

f) Presentation of the test results:

Part name	Material	Thickness mm	Temperature rise during normal heating	Temperature during test	Diameter of impression

IECNORM.COM : Click to view the full PDF of IEC TR 62354:2014

13.3.5 Resistance to environmental stress

Standard(s): IEC 60601-1:2005	Subclause(s): 8.8.4.2	13.3.5 Resistance to environmental stress

a) Equipment needed for the test:

1) An oxygen cylinder with a capacity at least 10 times the volume of the test samples. The cylinder has the means to suspend the test sample and to be filled with oxygen and hold pressure of 2,1 MPa ± 70k Pa.
2) Commercial oxygen that is not less than 97 % pure.
3) Clock or watch to measure time.
4) A means to heat the test sample to 70 °C ± 2 °C.

b) Safety precautions during the test:

Use normal laboratory safety PROCEDURES during this test.

Careful consideration to the handling of concentrated oxygen under pressure including the flammability of such mixture.

c) Test sample preparation:

Disassemble the DUT so that ceramic materials, beads and insulating material of heating conductors may be inspected.

Acquire parts that are used for safety insulation and are made of natural latex rubber for the test.

Suspend these parts within the oxygen cylinder.

d) Test conditions:

Prior to inspection of safety insulation parts, consider the MANUFACTURER'S recommendations for the environment and EXPECTED SERVICE LIFE including the wear of parts within the DUT that could result in the disposition of dust or conductive particles that could impact CREEPAGE DISTANCES or AIR CLEARANCES.

For insulation parts made of natural latex rubber provide an environment of oxygen at 2,1 MPa ± 70 kPa at a temperature of 70 °C ± 2 °C for 96 h.

e) Test set-up and PROCEDURE:

1) Ceramic material not tightly sintered, and the like, and beads alone are checked by inspection, that they are not used as SUPPLEMENTARY or REINFORCED INSULATION.
2) Insulating material in which heating conductors are embedded is also checked by inspection, that it is not used as two MEANS OF PROTECTION.
3) The CREEPAGE DISTANCES and AIR CLEARANCES of any MEANS OF PROTECTION are not to be reduced below the values specified in Subclause 8.9 of IEC 60601-1:2005 caused by environmental stresses including impairment by deposition of dirt or dust resulting from wear of parts.
4) Parts of natural latex rubber are aged in an atmosphere of oxygen under pressure. The samples are suspended freely in an oxygen cylinder, the effective capacity of the cylinder is at least 10 times the volume of the samples. The cylinder is filled with commercial oxygen not less than 97 % pure, to a pressure of 2,1 MPa ± 70 kPa.
5) The samples are kept in the cylinder at a temperature of 70 °C ± 2 °C for 96 h. Immediately afterwards, they are taken out of the cylinder and left at room temperature for at least 16 h. After the test, the samples are examined. Cracks visible to the naked eye constitute a failure.

f) Presentation of the test results:

Ceramic material not tightly sintered, and the like, and beads alone **are not/are** used as SUPPLEMENTARY or REINFORCED INSULATION.

Insulating material in which heating conductors are embedded **is/is not** used as TWO MEANS OF PROTECTION.

Cracks visible to the naked eye **were/were not** found upon inspection of natural latex rubber after exposure to oxygen at pressure and temperature as specified herein.

IECNORM.COM : Click to view the full PDF of IEC TR 62354:2014

13.3.6 Thermal cycling

Standard(s): IEC 60601-1:2005	Subclause(s): 8.9.3.4	13.3.6 Thermal cycling

a) Equipment needed for the test:

1) Environmental chamber

2) Dielectric strength tester

b) Safety precautions during the test:

Use normal laboratory safety PROCEDURES during this test.

c) Test sample preparation:

This test is to be applied only to ME EQUIPMENT containing insulating compound forming solid insulation between conductive parts and insulating compound forming a cemented joint with other insulating parts.

Insulating compound	Description	Location
1)		
2)		

One representative test sample.

Do not energize the DUT during this test.

d) Test conditions:

1) For situations where insulating compound forms solid insulation between conductive parts, a single finished sample is tested. The sample is subjected to the thermal cycling PROCEDURE, followed by humidity preconditioning according to Subclause 5.7 of IEC 60601-1:2005 for 48 h only and then followed by a dielectric strength test except that the test voltage is multiplied by 1,6.

2) For situations where insulating compound forms a cemented joint with other insulating parts, the reliability of the joint is checked by testing three samples. If a winding of solvent-based enamelled wire is used, it is replaced for the test by a metal foil or by a few turns of bare wire, placed close to the cemented joint. The three samples are then tested as follows.

– One of the samples is subjected to the thermal cycling PROCEDURE. Immediately after the last period at highest temperature during thermal cycling it is subjected to a dielectric strength test except that the test voltage is multiplied by 1,6.

– The other two samples are subjected to the thermal cycling PROCEDURE and after the last cycle, are subjected to humidity preconditioning according to Subclause 5.7 of IEC 60601-1:2005 for 48 h only, followed by a dielectric strength test except that the test voltage is multiplied by 1,6.

IECNORM.COM : Click to view the full PDF of IEC TR 62354:2014

13.3.6 Thermal cycling *(continued)*		
Standard(s): **IEC 60601-1:2005**	**Subclause(s):** **8.9.3.4**	**13.3.6 Thermal cycling**

e) Test set-up and PROCEDURE:

The sample is subjected 10 times to the following sequence of temperature cycles:

	68 h	at	T_1 ± 2 °C;
	1 h	at	25 °C ± 2 °C;
	2 h	at	0 °C ± 2 °C;
not less than	1 h	at	25 °C ± 2 °C,

where T_1 is the higher of:

– 10 °C above the maximum temperature of the relevant part, or
– 85 °C.

However, the 10 °C margin is not added if the temperature is measured by an embedded thermocouple.

The period of time taken for the transition from one temperature to another is not specified, but the transition is permitted to be gradual.

f) Presentation of the test results:

The tests are followed by inspection, including sectioning, and measurement. Cracks or voids in the insulating compound such as would affect the homogeneity of the material constitute a failure.

There **were no/were** cracks or voids found in the insulating compound.

IECNORM.COM : Click to view the full PDF of IEC TR 62354:2014

13.3.7 CREEPAGE DISTANCES and AIR CLEARANCES

Standard(s): IEC 60601-1:2005+AMD1:2012	Subclause(s): 8.9.4	13.3.7 CREEPAGE DISTANCES and AIR CLEARANCES

a) Equipment needed for the test:

1) Standard gauges
2) Callipers with magnifying feature or additional magnifying equipment
3) Standard test finger (Figure F.1)
4) Test hook (Figure F.2)

b) Safety precautions during the test:

Use normal laboratory safety PROCEDURES during this test.

c) Test sample preparation:

Do not energize the DUT during this test.

d) Test conditions:

When determining AIR CLEARANCE or CREEPAGE DISTANCE to ACCESSIBLE PARTS, the accessible surface of an insulating ENCLOSURE is considered to be conductive as if it was covered by metal foil wherever it can be touched with a standard test finger.

Any corner with included angle less than 80° is assumed to be bridged with an insulating link of 1 mm moved into the least favourable position (see Figure 6).

Where the distance across the top of a groove is 1 mm or more, no CREEPAGE DISTANCE exists across the air space (see Figure 5).

CREEPAGE DISTANCES and AIR CLEARANCES between parts moving relative to each other are measured with the parts in their least favourable positions.

Computed CREEPAGE DISTANCE is never less than measured AIR CLEARANCE.

Any air gap less than 1 mm wide is ignored when computing the total AIR CLEARANCE.

Coatings of varnish, enamel or oxide are ignored. Coverings of any insulating material, however, are considered as insulation, if the covering is equivalent to a sheet of insulating material of equal thickness with respect to its electrical, thermal and mechanical properties.

If CREEPAGE DISTANCES or AIR CLEARANCES for one or two MEANS OF PROTECTION are interrupted by one or more floating conductive parts, the minimum value specified in IEC 60601-1:2005 applies to the sum of the sections, except that distances less than 1 mm are not taken into consideration.

The minimum spacing (X) for grooves transverse to the CREEPAGE DISTANCE in Figure 4 to Figure 6 and Figure 8 to Figure 12 (inclusive) that are considered a MEANS OF OPERATOR PROTECTION may be adjusted based on pollution degree if the minimum AIR CLEARANCE is 3 mm or more.

The minimum width of the groove is:

– 0,25 mm for pollution degree 1;
– 1,0 mm for pollution degree 2;
– 1,5 mm for pollution degree 3.

If the specified minimum AIR CLEARANCE is less than 3 mm, the minimum spacing (X) for grooves transverse to the CREEPAGE DISTANCE is the lesser of:

– the relevant value specified in the previous paragraph, or
– one third of the specified minimum AIR CLEARANCE.

The minimum spacing (X) for a groove transverse to a CREEPAGE DISTANCE that is considered a MEANS OF PATIENT PROTECTION is 1 mm for pollution degree 1 and pollution degree 2, and 1,5 mm for pollution degree 3.

IECNORM.COM : Click to view the full PDF of IEC TR 62354:2014

13.3.7 CREEPAGE DISTANCES and AIR CLEARANCES (*continued*)

Standard(s): IEC 60601-1:2005+AMD1:2012	Subclause(s): 8.9.4	13.3.7 CREEPAGE DISTANCES and AIR CLEARANCES

In the case of a barrier placed on the surface of insulation or held in a recess, the CREEPAGE DISTANCES are measured over the barrier only if the latter is so affixed that dust and moisture cannot penetrate into the joint or recess.

For a DUT provided with an APPLIANCE INLET, the measurements are made with an appropriate connector inserted. For other DUTs incorporating POWER SUPPLY CORDS, they are made with supply conductors of the largest cross-sectional area specified by the MANUFACTURER and also without conductors.

Movable parts are placed in the least favourable position; nuts and screws with non-circular heads are tightened in the least favourable position.

Creepage distances and air clearances through slots or openings in external parts are measured to the standard test finger. If necessary, a force is applied to any point on bare conductors and to the outside of metal enclosures in an endeavour to reduce the creepage distances and air clearances while taking the measurements.

The force applied by means of a standard test finger has a value of:

2 N for bare conductors;

30 N for enclosures.

Creepage distance and air clearances are measured after use of the test hook, if relevant.

e) Test set-up and PROCEDURE:

Compliance is checked by measurement taking into account the rules in Figure 3 to Figure 11 (inclusive). In each figure, the dashed line (— — —) represents AIR CLEARANCE and the shaded bar (▒▒▒▒▒) represents CREEPAGE DISTANCE.

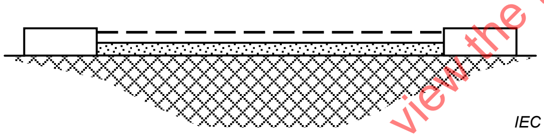

Condition: Path under consideration is a flat surface.

Rule: CREEPAGE DISTANCE and AIR CLEARANCE are measured directly across the surface.

Figure 3 – CREEPAGE DISTANCE and AIR CLEARANCE – Example 1

(IEC 60601-1:2005+IEC 60601-1:2005/AMD1:2012, Figure 22)

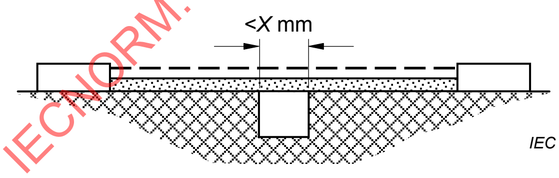

Condition: Path under consideration includes a parallel- or converging-sided groove of any depth with a width less than *X* mm.

Rule: CREEPAGE DISTANCE and AIR CLEARANCE are measured directly across the groove as shown.

Figure 4 – CREEPAGE DISTANCE and AIR CLEARANCE – Example 2

(IEC 60601-1:2005+IEC 60601-1:2005/AMD1:2012, Figure 23)

IECNORM.COM : Click to view the full PDF of IEC TR 62354:2014

13.3.7 CREEPAGE DISTANCES and AIR CLEARANCES (*continued*)

Standard(s)	Subclause(s):	13.3.7 CREEPAGE DISTANCES and AIR CLEARANCES
IEC 60601-1:2005+AMD1:2012	8.9.4	

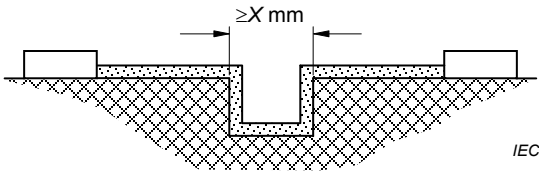

Condition: Path under consideration includes a parallel-sided groove of any depth and equal to or more than *X* mm.

Rule: AIR CLEARANCE is the "line of sight" distance. CREEPAGE DISTANCE path follows the contour of the groove.

Figure 5 – CREEPAGE DISTANCE and AIR CLEARANCE – Example 3

(IEC 60601-1:2005+IEC 60601-1:2005/AMD1:2012, Figure 24)

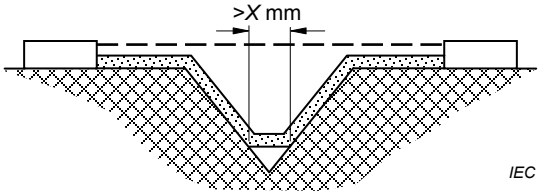

Condition: Path under consideration includes a V-shaped groove with a width greater than *X* mm and an internal angle of less than 80 °.

Rule: AIR CLEARANCE is the "line of sight" distance. CREEPAGE DISTANCE path follows the contour of the groove but "short-circuits" the bottom of the groove by a *X* mm link.

Figure 6 – CREEPAGE DISTANCE and AIR CLEARANCE – Example 4

(IEC 60601-1:2005+IEC 60601-1:2005/AMD1:2012, Figure 25)

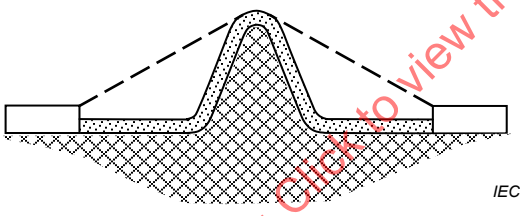

Condition: Path under consideration includes a rib.

Rule: AIR CLEARANCE is the shortest direct air path over the top of the rib. CREEPAGE DISTANCE path follows the contour of the rib.

Figure 7 – CREEPAGE DISTANCE and AIR CLEARANCE – Example 5

(IEC 60601-1:2005+IEC 60601-1:2005/AMD1:2012, Figure 26)

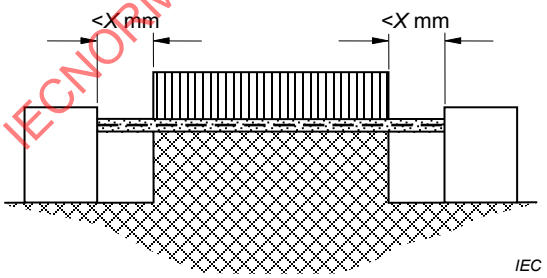

Condition: Path under consideration includes an uncemented joint with grooves less than *X* mm wide on each side.

Rule: CREEPAGE DISTANCE and AIR CLEARANCE path are the "line of sight" distance shown.

Figure 8 – CREEPAGE DISTANCE and AIR CLEARANCE – Example 6

(IEC 60601-1:2005+IEC 60601-1:2005/AMD1:2012, Figure 27)

IECNORM.COM : Click to view the full PDF of IEC TR 62354:2014

13.3.7 CREEPAGE DISTANCES and AIR CLEARANCES (*continued*)

Standard(s): IEC 60601-1:2005+AMD1:2012	Subclause(s): 8.9.4	13.3.7 CREEPAGE DISTANCES and AIR CLEARANCES

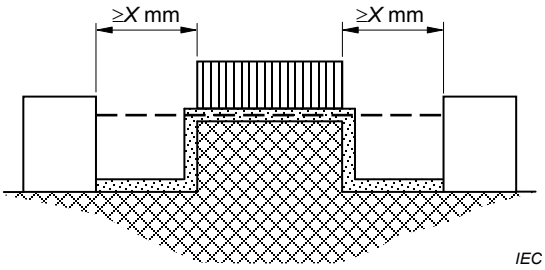

Condition: Path under consideration includes an uncemented joint with grooves equal to or more that *X* mm wide on each side.

Rule: AIR CLEARANCE is the "line of sight" distance. CREEPAGE DISTANCE path follows the contour of the groove.

Figure 9 – CREEPAGE DISTANCE and AIR CLEARANCE – Example 7

(IEC 60601-1:2005+IEC 60601-1:2005/AMD1:2012)

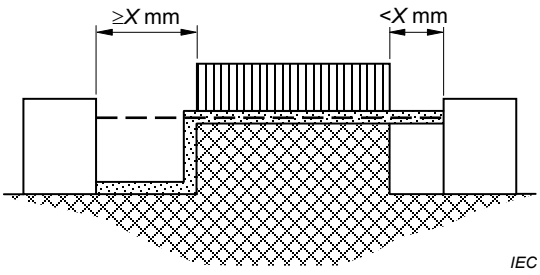

Condition: Path under consideration includes an uncemented joint with a groove on one side less than 1 mm wide and the groove on the other side equal to or more than *X* mm wide.

Rule: AIR CLEARANCE and CREEPAGE DISTANCE are as shown.

Figure 10 – CREEPAGE DISTANCE and AIR CLEARANCE – Example 8

(IEC 60601-1:2005+IEC 60601-1:2005/AMD1:2012, Figure 29)

IECNORM.COM : Click to view the full PDF of IEC TR 62354:2014

13.3.7 CREEPAGE DISTANCES and AIR CLEARANCES (*continued*)

Standard(s): IEC 60601-1:2005+AMD1:2012	Subclause(s): 8.9.4	13.3.7 CREEPAGE DISTANCES and AIR CLEARANCES

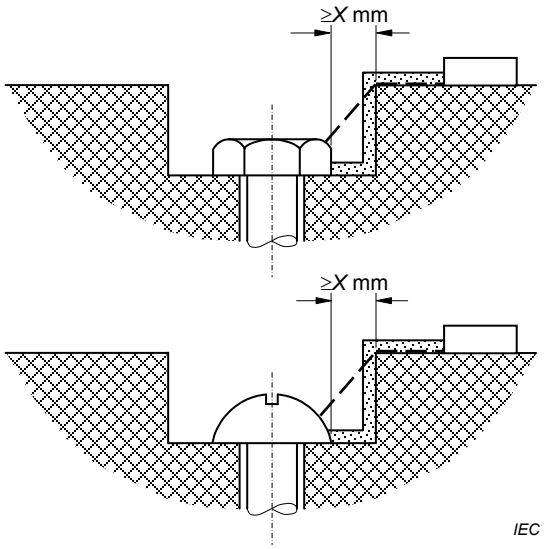

Condition: Gap between head of screw and wall of recess wide enough to be taken into account.

Rule: The AIR CLEARANCE is the shortest distance to any point on the head of the screw. CREEPAGE DISTANCE path follows the surface.

Figure 11 – CREEPAGE DISTANCE and AIR CLEARANCE – Example 9

(IEC 60601-1:2005+IEC 60601-1:2005/AMD1:2012, Figure 30)

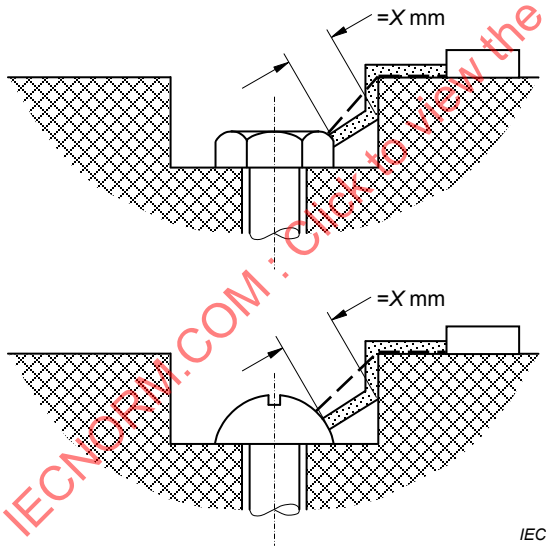

Condition: Gap between head of screw and wall of recess wide enough to be taken into account.

Rule: Measurement of CREEPAGE DISTANCE is from screw to wall at any point where the distance is equal to *X* mm. The AIR CLEARANCE is the shortest distance to any point on the head of the screw

(IEC 60601-1:2005, Figure 30)

Figure 12 – CREEPAGE DISTANCE and AIR CLEARANCE – Example 10

(IEC 60601-1:2005+IEC 60601-1:2005/AMD1:2012, Figure 31)

IECNORM.COM : Click to view the full PDF of IEC TR 62354:2014

13.3.7 CREEPAGE DISTANCES and AIR CLEARANCES *(continued)*

Standard(s): IEC 60601-1:2005+AMD1:2012	Subclause(s): 8.9.4	13.3.7 CREEPAGE DISTANCES and AIR CLEARANCES

f) Presentation of the test results:

The results of the measurements are specified in the table.

TABLE: CREEPAGE DISTANCE and AIR CLEARANCE

Insulation under test (area from insulation diagram)	Insulation type: (BI-BASIC / SI-SUPPLEMENTARY / DI-DOUBLE / RI-REINFORCED) (for IEC 60601-1:1988) (Functional / one MOOP / two MOOP / one MOPP/ two MOPP) (for IEC 60601-1:2005)	CREEPAGE DISTANCE mm	AIR CLEARANCE mm	Remarks

IECNORM.COM : Click to view the full PDF of IEC TR 62354:2014

13.3.8 Strain relief (cord anchorage)

Standard(s): IEC 60601-1:2005	Subclause(s): 8.11.3.5	13.3.8 Strain relief (cord anchorage)

a) Equipment needed for the test:

1) Spring balance, 30 N – 100 N
2) Device that allows the pull force to be applied on the cord sheath
3) Torque meter, 0,1 Nm – 0,35 Nm
4) Device that allows the torque to be applied on the cord
5) Scale and weight for determination of the mass of the DUT
6) Callipers
7) Radius gauges

b) Safety precautions during the test:

No special safety precaution required.

c) Test sample preparation:

The sample should be securely mounted. The power supply conductors are, if possible, disconnected from the terminals or from the MAINS CONNECTOR. Initial positions of the conductor ends were marked. A mark is made on the cord sheath at a distance of 20 mm from the cord anchorage.

d) Test conditions:

Do not energize the DUT during this test.

e) Test set-up and PROCEDURE:

The cord was subjected 25 times to a pull indicated in Table 6. The pull was applied without jerks, each time for 1 s. The longitudinal displacement of the mark on the cord sheath was measured while the cord was subjected to the last pull. Immediately afterwards, the cord was subjected for 1 min to a torque value indicated in the table. After the test a movement of conductor ends was measured and recorded.

Table 6 – Testing of cord anchorages

(IEC 60601-1:2005, Table 18)

Mass (m) of ME EQUIPMENT kg	Pull N	Torque Nm
$m \leq 1$	30	0,1
$1 < m \leq 4$	60	0,25
$m > 4$	100	0,35

IECNORM.COM : Click to view the full PDF of IEC TR 62354:2014

13.3.8 Strain relief (cord anchorage) *(continued)*

Standard(s):	Subclause(s):	13.3.8 Strain relief (cord anchorage)
IEC 60601-1:2005	8.11.3.5	

f) Presentation of the test results:

It **was/was not** possible to push the cord back into the unit to such an extent that the cord or its conductors, or both, could be damaged or internal parts of the unit could be displaced.

The cord **did/did not** slip in its anchorage.

The cord sheath **was/was not** displaced by more than 2 mm.

The conductor ends **did/did not** move more than 1 mm from their normally connected position.

The PROTECTIVE EARTH CONDUCTOR **was/was not** subjected to strain as long as the phase conductors were in contact with their terminals.

CREEPAGE DISTANCES and AIR CLEARANCES **were/were not** reduced below the values specified.

The cord anchorage **was/was not** made of insulating material; or

The cord anchorage **was/was not** made of metal but insulated from non-PROTECTIVELY EARTHED ACCESSIBLE PARTS by at least one MEANS OF PROTECTION; or

The cord anchorage **was/was not** made of metal provided with an insulating lining, which is affixed to the cord anchorage or a flexible bushing that forms part of the cord guard specified in Subclause 8.11.3.6 of IEC 60601-1:2005 and the lining or bushing forms ONE MEANS OF PROTECTION.

The cord anchorage **does/does not** clamp the cord via a screw that bears directly on the cord insulation.

Screws, if any, that are used when replacing the POWER SUPPLY CORD **do/do not** serve to fix any component other than parts of the cord anchorage.

TABLE: Cord anchorages

Cord under test	Mass of ME EQUIPMENT kg	Pull N	Torque Nm	Remarks

IECNORM.COM : Click to view the full PDF of IEC TR 62354:2014

13.3.9 Cord guard flexing (Cord bending)

Standard(s): IEC 60601-1:2005	Subclause(s): 8.11.3.6	13.3.9 Cord guard flexing (Cord bending)

a) Equipment needed for the test:

1) Calliper
2) Weights
3) Cylinder of 1,5 × diameter of cord

b) Safety precautions during the test:

No special safety precaution required.

c) Test sample preparation:

The sample should be securely mounted.

d) Test conditions:

Flat cords are bent in a direction perpendicular to the plane containing the axis of the cores.

e) Test set-up and PROCEDURE:

The unit is placed so that the axis of the cord guard, where the cord leaves it, is projected at an angle of 45° when the cord is free from stress. A mass in grams, equal to 10 times the square of the overall diameter (mm) of the cord, or for flat cords, the minor radius of the cord, is attached to the free end of the cord. Flat cords are bent in the plane of least resistance. Immediately after attaching the mass, the radius of curvature of the cord is measured.

f) Presentation of the test results:

Cord diameter (*D*): _____ mm.

Weight attached: _____.

Radius of curvature: _____.

The radius of the curvature of the cord **was/was not** less than 1,5 × *D*.

IECNORM.COM : Click to view the full PDF of IEC TR 62354:2014

13.3.10 Access to hazardous moving parts

Standard(s): IEC 60601-1:2005+AMD1:2012	Subclause(s): 9.2.1	13.3.10 Access to hazardous moving parts

a) Equipment needed for the test:

1) Standard test finger (Figure F.1)
2) Unjointed test finger
3) Force gauge
4) Test hook
5) Watch/clock

b) Safety precautions during the test:

Use normal laboratory safety PROCEDURES during this test.

c) Test sample preparation:

A sample, with all OPERATOR ACCESS COVERS removed.

d) Test conditions:

This test applies to ME EQUIPMENT that contains hazardous moving parts.

Do not energize the DUT during this test.

e) Test set-up and PROCEDURE:

1) The test hook is inserted in each opening that might provide access to hazardous moving parts and is subsequently pulled with a force of 20 N for 10 s and in a direction substantially perpendicular to the surface in which the relevant opening is present.
2) The test finger is applied without appreciable force to all apertures in an attempt to contact or come into the path of hazardous moving parts. The test finger is applied in every possible position to the aperture's openings. Openings preventing the entry of the test finger are further tested by means of a straight unjointed version of the test finger, which is applied with a force of 30 N. If entry of the unjointed version is possible, the test with the articulated test finger is repeated with the finger being pushed through the aperture, if necessary.

The following apertures were evaluated:

Opening location	Hazardous moving part	Remarks

IECNORM.COM : Click to view the full PDF of IEC TR 62354:2014

13.3.10 Access to hazardous moving parts *(continued)*

Standard(s):	Subclause(s):	13.3.10 Access to hazardous moving parts
IEC 60601-1:2005+AMD1:2012	9.2.1	

f) Presentation of the test results:

It **was/was not** possible to touch or come into the path of hazardous moving parts in OPERATOR access areas with the test finger.

It **was/was not** unlikely that SERVICE PERSONNEL could unintentionally contact or come into the path of hazardous moving parts during servicing operations involving other parts of the ME EQUIPMENT.

It **was/was not** possible to touch or come into the path of the following hazardous moving parts with the standard test finger:

TABLE: Touchable hazardous moving parts	
Location	**Remarks**

IECNORM.COM : Click to view the full PDF of IEC TR 62354:2014

13.3.11 Gaps

Standard(s):	Subclause(s):	13.3.11 Gaps
IEC 60601-1:2005	9.2.2.2	

a) Equipment required by the test:

1) Callipers
2) Steel rule, steel tape or other distance measuring device

b) Safety precautions during the test:

Use normal laboratory safety PROCEDURES during this test.

c) Test sample preparation:

A test sample with all ACCESSORIES, APPLIED PARTS and guards.

d) Test conditions:

The DUT is energized only to provide the minimum gap distance(s) then disconnected from power during gap measurement.

e) Test set-up and PROCEDURE:

Inspect for TRAPPING ZONES according to Table 7 considering various parts of the human body relative to the DUT and its associated parts.

f) Presentation of the test results:

It **was/was not** possible to touch hazardous moving parts within the TRAPPING ZONES.

TABLE: Gaps	
Location	**Remarks**

IECNORM.COM : Click to view the full PDF of IEC TR 62354:2014

13.3.11 Gaps *(continued)*

Standard(s):	Subclause(s):	13.3.11 Gaps
IEC 60601-1:2005	9.2.2.2	

Table 7 – Acceptable gaps [a]

(IEC 60601-1:2005, Table 20)

Part of body	Adult gap [a] mm	Children gap [a] mm	Illustration
Body	>500	>500	
Head	>300 or <120	>300 or <60	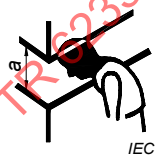
Leg	>180	>180	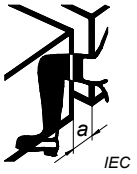
Foot	>120 or <35	>120 or <25	
Toes	>50	>50	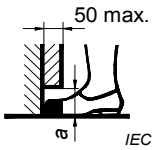
Arm	>120	>120	
Hand, wrist, fist	>100	>100	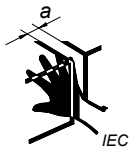
Finger	> 25 or < 8	> 25 or < 4	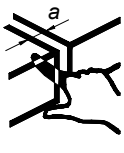

[a] The values in this table are taken from ISO 13852:1996.

IECNORM.COM : Click to view the full PDF of IEC TR 62354:2014

13.3.12 Instability (in transport position; excluding transport; from horizontal and vertical forces and from unwanted lateral movement)

Standard(s):	Subclause(s):	13.3.12 Instability (in transport position; excluding transport; from horizontal and vertical forces and from unwanted lateral movement)
IEC 60601-1:2005+AMD1:2012	9.4.2.1, 9.4.2.2, 9.4.2.3, 9.4.3.1, 9.4.3.2	

a) Equipment needed for the test:

1) Planes inclined 5° and 10° from the horizontal (larger than the base of the DUT)
2) 250 N strain gauge
3) 800 N weights
4) Scale (for weighing the DUT)
5) Inclinometer or steel rules
6) Test floor surface that is hard and flat (i.e. concrete floor covered with 2 mm to 4 mm thick vinyl flooring material)
7) Steel ruler, steel tape or equivalent means to measure distances

b) Safety precautions during the test:

Use normal laboratory safety PROCEDURES during this test. Use appropriate precautions and necessary test personnel considering the DUT overbalancing while moving.

c) Test sample preparation:

Prior to conducting the test, prepare the DUT in accordance with the ACCOMPANYING DOCUMENTS for transport condition. Always use worst-case loading and locating of drawers, doors, shelves, etc. within the MANUFACTURE'S specifications. The following should also be considered:

– The DUT is provided with all specified connection leads: the POWER SUPPLY CORD and any interconnecting cords. It is provided with the least favourable combination of possible detachable parts, ACCESSORIES and load as specified in NORMAL USE.

– A DUT having an APPLIANCE INLET is provided with the specified DETACHABLE POWER SUPPLY CORD.

– The connection leads are laid down on the inclined plane or positioned on holders attached to the DUT in the position most unfavourable for stability.

– If castors/wheels are present, they are temporarily immobilized, if necessary by blocking, in their most disadvantageous position.

– Doors, drawers, shelves and the like are placed in the most disadvantageous position and fully loaded or unloaded, whichever represents "worst case" as specified in the ACCOMPANYING DOCUMENTS.

– A DUT having containers for liquids is tested with these containers completely or partly filled or empty, whichever is least favourable.

– DUT carrying a PATIENT is loaded with maximum PATIENT weight, unloaded or loaded with a weight in between, whatever is considered the worst case.

d) Test conditions:

Do not energize the DUT during this test. ME EQUIPMENT with APPLIED PARTS and ACCESSORIES and drawers, doors and shelves fully loaded as specified in the ACCOMPANYING DOCUMENTS.

IECNORM.COM : Click to view the full PDF of IEC TR 62354:2014

13.3.12 Instability (in transport position; excluding transport; from horizontal and vertical forces and from unwanted lateral movement) *(continued)*

Standard(s):	Subclause(s):	13.3.12 Instability (in transport position; excluding transport; from horizontal and vertical forces and from unwanted lateral movement)
IEC 60601-1:2005+AMD1:2012	9.4.2.1, 9.4.2.2, 9.4.2.3, 9.4.3.1, 9.4.3.2	

e) Test set-up and PROCEDURE:

1) *Tilt test:*

The DUT is tilted 10° (on the plane inclined) from its intended upright position unless a warning notice is present. If a warning notice is present, the DUT is tilted 5° (on the plane inclined) from its intended upright position.

NOTE For 10° tilt: (Distance lifted) = (Width of base) × (0,1736) = 10°

For 5° tilt: (Distance lifted) = (Width of base) × (0,0875) = 5°

This test applies to PORTABLE/TRANSPORTABLE ME EQUIPMENT that is intended to be placed on a surface such as a floor or table.

Transport includes moving the DUT from room to room.

2) *Force test:*

The test applies to DUTs having a mass of greater than or equal to 25 kg other than FIXED DUTs intended to be used on the floor.

The DUT and its parts are placed on a horizontal plane and a force equal to 15 % of its weight, but not more than 150 N, is applied in any direction, except directions with an upward component. Unless otherwise marked, the force is applied at any point of the DUT but not exceeding 1,5 m from the floor. The DUT is prevented from sliding on the floor by use of a horizontal obstruction that is fastened to the floor and does not exceed 20 mm height. If the application of the test force results in lateral movement of the DUT, increase the height of the obstruction to the minimum extent necessary to prevent lateral movement.

( ) All jacks were put in place (if used under NORMAL CONDITIONS).

( ) All doors and drawers, etc., which may be moved for servicing by the OPERATOR or by SERVICE PERSONNEL were placed in their most unfavourable position consistent with the installation instructions.

The ME EQUIPMENT is prevented from sliding on the floor by a horizontal obstruction, not exceeding 20 mm height, which is fastened flat on the floor. If the application of the test force results in lateral movement of the ME EQUIPMENT, increase the height of the obstruction to the minimum extent necessary to prevent lateral movement.

3) *Downward force test:*

The floor-standing DUT is subjected to a downward force of 800 N. The force is applied at the point of maximum moment to any horizontal surface of at least 20 cm by at least 20 cm and that offers an obvious foothold or sitting surface, at a height up to 1 m from the floor. All doors, drawers, etc. are closed during this test. The downward force is applied with the complete flat surface of the test TOOL in contact with the DUT; the test TOOL is not required to be in full contact with uneven surfaces, e.g. corrugated or curved surfaces.

4) *Test for tilt caused by unwanted lateral movement:*

The MOBILE ME EQUIPMENT is placed in its transport position (or in the worst-case NORMAL USE position) with the SAFE WORKING LOAD in place and the locking device (e.g. brakes) activated, on a hard flat surface inclined at 10° or 5° from the horizontal plane. If castors are incorporated, they are positioned in their worst-case position.

The ME EQUIPMENT (TRANSPORTABLE or STATIONARY ME EQUIPMENT that is intended to be used on the floor) is placed on a horizontal plane with the SAFE WORKING LOAD in place and the locking device (e.g. brakes) activated. If castors are incorporated, they are positioned in their worst-case position. A force equal to 15 % of the weight of the DUT, but not more than 150 N, is applied in any direction, except a direction having an upward component, at the highest point of the ME EQUIPMENT but not exceeding 1,5 m from the floor.

IECNORM.COM : Click to view the full PDF of IEC TR 62354:2014

13.3.12 Instability (in transport position; excluding transport; from horizontal and vertical forces and from unwanted lateral movement) *(continued)*

Standard(s):	Subclause(s):	13.3.12 Instability (in transport position; excluding transport; from horizontal and vertical forces and from unwanted lateral movement)
IEC 60601-1:2005+AMD1:2012	9.4.2.1, 9.4.2.2, 9.4.2.3, 9.4.3.1, 9.4.3.2	

f) Presentation of the test results:

1) ***Tilt test:***

The tilt test was conducted at 5° or 10°.

Position of cables: _____

Position on the incline	Describe worst-case loading	Observation/Results

The DUT **did/did not** overbalance.

The DUT **did/did not** move unexpectedly to a degree that could present an unacceptable RISK to the PATIENT, OPERATOR or other person.

2) ***Force test:***

Weight of DUT: _____ kg

Total force applied: _____ N

Force applied to: _____

Force also applied to: _____

Force applied	Location applied	Height from floor	Direction of force	Results

The DUT, any ACCESSORY, or any parts **did/did not** overbalance.

Applicable surfaces **are/are not** marked with a clearly legible warning of the RISK; _____ symbol used;

The following features for additional stabilization means were required:

_____

_____

IECNORM.COM : Click to view the full PDF of IEC TR 62354:2014

13.3.12 Instability (in transport position; excluding transport; from horizontal and vertical forces and from unwanted lateral movement) *(continued)*

Standard(s):	Subclause(s):	13.3.12 Instability (in transport position; excluding transport; from horizontal and vertical forces and from unwanted lateral movement)
IEC 60601-1:2005+AMD1:2012	9.4.2.1, 9.4.2.2, 9.4.2.3, 9.4.3.1, 9.4.3.2	

3) ***Downward force test:***

Force applied to: _____

Force also applied to: _____

Force applied	Location applied	Height from floor	Results

A legible warning of the RISK of stepping or sitting **is/is not** provided on the DUT; _____ symbol used.

The DUT, any ACCESSORY, or any parts **did/did not** overbalance.

4) ***Test for tilt caused by unwanted lateral movement***

Brakes **are/are not** normally activated and can only be deactivated by the continuous actuation of a control.

The DUT **is/is not** fitted with locking devices intended to prevent any unwanted lateral movement of the DUT or its parts in the transport position.

Following the initial elastic movement, initial creepage and initial pivoting of castors, any lateral movement of the MOBILE ME EQUIPMENT greater than 50 mm (in relation to the inclined plane) **did/did not** occur.

IECNORM.COM : Click to view the full PDF of IEC TR 62354:2014

13.3.13 Castors and wheels (Force for propulsion, movement over a threshold)

Standard(s): IEC 60601-1:2005+AMD1:2012	Subclause(s): 9.4.2.4.2, 9.4.2.4.3	13.3.13 Castors and wheels (Force for propulsion, movement over a threshold)

a) Equipment needed for the test:

1) Hard flat horizontal floor (vinyl covered concrete)
2) Force gauge with a range exceeding 200 N
3) Stop watch, watch or clock
4) Steel ruler or steel tape or equivalent means to measure distance
5) In place of 3) and 4) above, a means to measure the rate of linear movement
6) Threshold 10 mm ± 0,5 mm high and 80 mm wide with a radius of 2 mm ± 0,1 mm at the top edges
7) Scale (for weighing the DUT)

b) Safety precautions during the test:

Use normal laboratory safety PROCEDURES during this test. Use appropriate precautions and necessary test personnel considering the DUT overbalancing while moving.

c) Test sample preparation:

One representative sample of MOBILE ME EQUIPMENT in transport position with any SAFE WORKING LOAD in place as indicated in the ACCOMPANYING DOCUMENTS.

d) Test conditions:

ME EQUIPMENT, APPLIED PARTS and ACCESSORIES and means to fully load any drawers, doors, shelves as specified in the ACCOMPANYING DOCUMENTS.

This test applies to a DUT where the specification does not state that more than one person is needed.

e) Test set-up and PROCEDURE:

1) ***Force for propulsion:***

Place the DUT on a hard flat horizontal floor (e.g. concrete floor covered with 2 mm to 4 mm thick vinyl flooring material).

Force is applied at a height of 1 m above the floor or at the highest point on the DUT if its height is less than 1 m.

The force needed to propel the DUT at a speed of 0,8 m/s ± 0,1 m/s is measured.

2) ***Movement over a threshold:***

The DUT (MOBILE ME EQUIPMENT exceeding 45 kg) is moved as in NORMAL USE 10 times in forward direction over (up and down) a solid vertical plane obstruction with a rectangular cross-section, 10 mm ± 0,5 mm high and 80 mm wide with a radius of 2 mm ± 0,1 mm at the top edges that is affixed flat on the floor. All wheels and castors are to impact the obstruction at a speed of 0,8 m/s ± 0,1 m/s for manual MOBILE ME EQUIPMENT, or for motor driven MOBILE ME EQUIPMENT, the maximum speed capable of being maintained. Manual MOBILE ME EQUIPMENT is propelled by force acting at its handle.

IECNORM.COM : Click to view the full PDF of IEC TR 62354:2014

13.3.13 Castors and wheels (Force for propulsion, movement over a threshold) *(continued)*

Standard(s): IEC 60601-1:2005+AMD1:2012	Subclause(s): 9.4.2.4.2, 9.4.2.4.3	13.3.13 Castors and wheels (Force for propulsion, movement over a threshold)
f) Presentation of the test results: 1) ***Force for propulsion:*** Total force applied: _____ N Force applied to: _____ The force required to move the DUT **does not/does** exceed 200 N or the ACCOMPANYING DOCUMENTS specify that the DUT is to be moved by more than one person; 2) ***Movement over a threshold:*** The DUT **was/was not** able to pass over the 10 mm high threshold. The DUT **did/did not** overbalance when passing over the 10 mm high threshold. After the test, there **was/was no** observable reduction of CREEPAGE DISTANCES or AIR CLEARANCES. After the test, there **was/was no** observable access to hazardous electrical parts. After the test, there **was/was no** observable access to moving parts.		

IECNORM.COM : Click to view the full PDF of IEC TR 62354:2014

13.3.14 Handle loading

Standard(s):	Subclause(s):	13.3.14 Handle loading
IEC 60601-1:2005+AMD1:2012	9.4.4	

a) Equipment needed for the test:

1) Calliper
2) Weights or tension gauge
3) Scale (for weighing the DUT)
4) Means to uniformly distribute the weight over a 7 cm length at the centre of the handle

b) Safety precautions during the test:

Use normal laboratory safety PROCEDURES during this test.

c) Test sample preparation:

One representative sample with fully loaded options/ACCESSORIES, consisting of the complete ENCLOSURE in its normal position.

d) Test conditions:

( ) The ME EQUIPMENT is furnished with only one handle.

( ) The ME EQUIPMENT is furnished with more than one handle but so designed that is might be carried by only one handle.

( ) The force is distributed between the handles. The distribution of force was determined by calculation of the percentage of the ME EQUIPMENT mass sustained by each handle.

Do not energize the DUT during this test.

e) Test set-up and PROCEDURE:

1) The handles and their means of attachment are subjected to a force equal to four times the weight of the DUT in any direction of NORMAL USE and transport.
2) If more than one handle is furnished on PORTABLE DUT, the force should be distributed between the handles. The distribution of forces should be determined by measuring the percentage of the DUT weight sustained by each handle with the DUT in the normal carrying position. If the DUT is furnished with more than one handle but is so designed that it can readily be carried by only one handle, then each handle is to be capable of sustaining the total force.
3) The force is applied uniformly over a 7 cm length of the handle at the centre, starting at zero and gradually increasing so that the test value will be attained in 5 s to 10 s and maintained for a period of 1 min.

IECNORM.COM : Click to view the full PDF of IEC TR 62354:2014

13.3.14 Handle loading *(continued)*

Standard(s):	Subclause(s):	13.3.14 Handle loading
IEC 60601-1:2005+AMD1:2012	9.4.4	

f) Presentation of the test results:

ME EQUIPMENT other than PORTABLE ME EQUIPMENT or its part with a mass of more than 20 kg that needs to be lifted in NORMAL USE or transport **is/is not** provided with suitable handling devices (for example handles, lifting eyes, etc.) or the ACCOMPANYING DOCUMENTS indicate the points where it can be lifted safely, unless the method of handling is obvious and no HAZARDS can develop when this is done.

If the means for lifting are handles, they **are/are not** suitably placed to enable the ME EQUIPMENT or its part to be carried by two or more persons.

ME EQUIPMENT specified by the MANUFACTURER as PORTABLE ME EQUIPMENT with a mass of more than 20 kg **has/does not have** one or more carrying-handles suitably placed to enable the ME EQUIPMENT to be carried by two or more persons. Check by inspection and carrying the DUT.

Weight of DUT: _____ kg

Number of handles tested: _____

Force applied to each handle: _____ N

Handle loading test:

The handle(s) or other means **did/did not** support the weight.

The handle or other means **did not break/broke loose** from the DUT.

There **was/was no** permanent distortion, cracking or other evidence of breakage of the handle(s) or their attachment means.

IECNORM.COM : Click to view the full PDF of IEC TR 62354:2014

13.3.15 Safety catch evaluation

Standard(s):	Subclause(s):	13.3.15 Safety catch evaluation
IEC 60601-1:2005+AMD1:2012	9.8.1, 9.8.2	

a) Equipment needed for the test:

1) Calliper
2) Weights
3) Tension gauge

b) Safety precautions during the test:

Use normal laboratory safety PROCEDURES during this test.

c) Test sample preparation:

Prior to performing these tests, the PATIENT support/suspension system is positioned horizontally in its most disadvantageous position in NORMAL USE.

d) Test conditions:

Do not energize the DUT during this test.

e) Test set-up and PROCEDURE:

1) The suspension system parts indicated in the table below (chain, cable, band, spring, belt, jack screw nut, pneumatic, hydraulic hoses, or the like) employed to support a load, are defeated by convenient means (cut or removed suddenly), thereby causing the maximum normal load to fall from the most adverse position permitted by the construction of the DUT and to activate a MECHANICAL PROTECTIVE DEVICE. The travel after such defeat is measured as well as other observed results that could affect the RISK of possible injury.

2) If testing is needed to demonstrate compliance with 9.8.1 or 9.8.2, a test load equal to the TOTAL LOAD times the required TENSILE SAFETY FACTOR is gradually applied to the support assembly under test. The support assembly under test is to be in equilibrium after 1 min, or otherwise not result in an unacceptable RISK.

It may be necessary to support assemblies that are connected to the assembly under test but do not require such a high safety factor, e.g. assembly under test requires TENSILE SAFETY FACTOR = 8 and assembly supporting it is designed with a TENSILE SAFETY FACTOR = 4. Use of additional support should be explained in the test report.

The 1 min time period may need to be longer for materials which might have creep type problems, such as plastics or other non-metallic materials.

TABLE: Suspension systems with safety devices

Part defeated	Load supported	Safety device	Travelled distance	Can ME EQUIPMENT be used after the test?	Is it obvious that safety device activated?	Remarks

f) Presentation of the test results:

There **was/was no** evidence of damage to a safety catch or other restraining means that would affect its ability to perform its intended function.

IECNORM.COM : Click to view the full PDF of IEC TR 62354:2014

13.3.16 Support loading

Standard(s):	Subclause(s):	13.3.16 Support loading
IEC 60601-1:2005+AMD1:2012	9.8.3	

a) Equipment needed for the test:

1) Calliper
2) Weights
3) Tension gauge

b) Safety precautions during the test:

Use normal laboratory safety PROCEDURES during this test.

c) Test sample preparation:

Prior to performing these tests, the PATIENT support/suspension system is positioned horizontally in its most disadvantageous position in NORMAL USE.

d) Test conditions:

Do not energize the DUT during this test.

e) Test set-up and PROCEDURE:

1) ***Static forces:***

– A mass equal to two times 135 kg or two times the intended person load, whichever is greater, is applied to the footrest over an area of 0,1 m^2 for 1 min. After the test, if the footrest and its fixings shows any damage or deflection that could result in an unacceptable RISK this constitutes a failure.

– A mass of 60 % of the part of the SAFE WORKING LOAD representing the PATIENT or OPERATOR, as defined in the instructions for use, or a minimum 80 kg, is placed on the support/suspension system with the centre of the load 60 mm from the outer edge of the support/suspension system for a time of at least 1 min. Any deflection of the support/suspension system that could result in an unacceptable RISK constitutes a failure.

2) ***Dynamic forces:***

For the area of support/suspension where a PATIENT or OPERATOR can sit, a mass (as defined in Figure 13) equivalent to the SAFE WORKING LOAD representing the PATIENT or OPERATOR as defined in the instructions for use is dropped from a distance of 150 mm above the seat area. Any loss of function or structural damage that could result in an unacceptable RISK constitutes a failure.

IECNORM.COM : Click to view the full PDF of IEC TR 62354:2014

13.3.16 Support loading *(continued)*

Standard(s):	Subclause(s):	13.3.16 Support loading
IEC 60601-1:2005	9.8.3	

Dimensions in mm

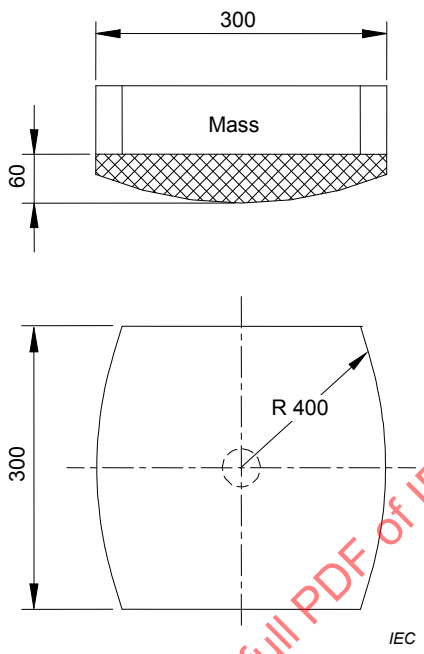

NOTE The top reservoir of the body upper-carriage module is formed of wood, metal or a similar material. The reservoir is intended to retain the appropriate human body mass, typically with high density material (e.g. lead). The bottom portion is foam. The resiliency or spring factor of the foam (ILD or IFD ratings) is not specified, as with a large mass being dropped, the foam properties are likely inconsequential. The foam is cylindrical, rather than spherical.

Figure 13 – Human body test mass

(IEC 60601-1:2005+AMD1:2012, Figure 33)

f) Presentation of the test results:

Item loaded	Area of load	Mass of load	Duration of load	Results

There **was /was no** damage to parts of the support system such as chains, clamps, cords, cord terminations and connections, belts, axles, pulleys and the like that affect protection against the RISK of injury to persons.

The support system **remained/did not remain** in equilibrium 1 min after application of the test load.

Foot rests/chairs **did not show/showed** signs of distortion or impending failure.

They **were/were not** capable of performing their intended function at the conclusion of the test.

IECNORM.COM : Click to view the full PDF of IEC TR 62354:2014

13.3.16 Support loading *(continued)*

Standard(s): IEC 60601-1:2005	Subclause(s): 9.8.3	13.3.16 Support loading

Area tested	Weight Used	Results

IECNORM.COM : Click to view the full PDF of IEC TR 62354:2014

13.3.17 Overflow

Standard(s):	Subclause(s):	13.3.17 Overflow
IEC 60601-1:2005+AMD1:2012	11.6.2	

a) Equipment needed for the test:

1) Fluid measuring container
2) LEAKAGE CURRENTS measurement set-up
3) Dielectric strength tester
4) Equipment specified in subclause 13.3.13 (movement over a threshold as defined in subclause 9.4.2.4.3 of IEC 60601-1:2005+AMD1:2012)
5) Equipment to verify ESSENTIAL PERFORMANCE

b) Safety precautions during the test:

Use normal laboratory safety PROCEDURES during this test.

c) Test sample preparation:

This test should be applied only TO ME EQUIPMENT that incorporates a reservoir or liquid storage chamber that is liable to be overfilled or to overflow in NORMAL USE.

Liquid containers		
Description	**Location**	**Capacity**
1)		
2)		
3)		

One representative test sample.

Do not energize the DUT during this test.

d) Test conditions:

Liquid containers or reservoirs are completely filled unless restrictions on filling are provided in labelling and the instructions for use.

e) Test set-up and PROCEDURE:

If warnings or safety notices regarding overfilling are marked on the TRANSPORTABLE ME EQUIPMENT, the liquid reservoir is filled to the indicated maximum level.

If there is no warning or safety notice regarding overfilling marked on the TRANSPORTABLE ME EQUIPMENT, the liquid reservoir is filled completely and subsequently a further quantity equal to 15 % of the capacity of the reservoir is added poured in steadily over a period of 1 min.

TRANSPORTABLE ME EQUIPMENT is subsequently tilted through an angle of 10° in the least favourable direction(s) (if necessary with refilling) starting from the position of NORMAL USE.

MOBILE ME EQUIPMENT exceeding 45 kg is moved over a threshold as described in 9.4.2.4.3.

After these PROCEDURES, the ME EQUIPMENT is to pass the appropriate dielectric strength and LEAKAGE CURRENT tests and is to show no signs of wetting of uninsulated electrical parts or electrical insulation of parts that could result in a HAZARDOUS SITUATION the loss of BASIC SAFETY or ESSENTIAL PERFORMANCE in NORMAL CONDITION or in combination with a SINGLE FAULT CONDITION (based on a visual inspection).

f) Presentation of the test results:

Immediately following the overflow condition, the dielectric strength test and LEAKAGE CURRENT tests were repeated. The DUT was examined for signs of wetting of uninsulated live parts and/or electrical insulation.

There **was /was no** indication of dielectric breakdown.

LEAKAGE CURRENT testing **remained/did not remain** in compliance.

There **was /was no** wetting of uninsulated electrical parts or electrical insulation of parts that could result in the loss of BASIC SAFETY or ESSENTIAL PERFORMANCE in NORMAL CONDITION or in combination with a SINGLE FAULT CONDITION (based on a visual inspection).

IECNORM.COM : Click to view the full PDF of IEC TR 62354:2014

13.3.18 Spillage

Standard(s):	Subclause(s):	13.3.18 Spillage
IEC 60601-1:2005+AMD1:2012	11.6.3	

a) Equipment needed for the test:

1) Fluid measuring container
2) LEAKAGE CURRENT measurement set-up
3) Dielectric strength tester
4) Equipment to verify ESSENTIAL PERFORMANCE

b) Safety precautions during the test:

Use normal laboratory safety PROCEDURES during this test.

c) Test sample preparation:

This test should be applied only to ME EQUIPMENT that handles liquids in NORMAL USE, including ME EQUIPMENT or ME SYSTEMS used in an environment where the process has determined that spillage on the ME EQUIPMENT is likely to occur.

One representative test sample.

Do not energize the DUT during this test.

d) Test conditions:

The DUT is positioned as in NORMAL USE.

e) Test set-up and PROCEDURE:

A quantity of normal tap water is poured steadily on a point on the top of the DUT for a period of time and from a height based on the MANUFACTURER'S analysis from the RISK MANAGEMENT FILE.

The type of liquid, volume, duration of the spill and location (point) should be determined through the RISK MANAGEMENT PROCESS to identify the least favourable configuration during NORMAL USE.

After the test, the DUT is to pass the appropriate dielectric strength and LEAKAGE CURRENT tests and is to show no signs of wetting of uninsulated electrical parts or electrical insulation of parts that could result in the loss of BASIC SAFETY or ESSENTIAL PERFORMANCE in NORMAL CONDITION or in combination with a SINGLE FAULT CONDITION (based on visual inspection).

f) Presentation of the test results:

Immediately following spillage, the dielectric strength test and LEAKAGE CURRENT tests were repeated. The DUT was examined for signs of wetting of uninsulated live parts and/or electrical insulation.

There **was /was no** indication of dielectric breakdown.

LEAKAGE CURRENT testing **remained/did not remain** in compliance.

There **was /was no** wetting of uninsulated electrical parts or electrical insulation of parts that could result in the loss of BASIC SAFETY or ESSENTIAL PERFORMANCE in NORMAL CONDITION or in combination with a SINGLE FAULT CONDITION (based on a visual inspection)..

IECNORM.COM : Click to view the full PDF of IEC TR 62354:2014

13.3.19 Leakage

Standard(s):	Subclause(s):	13.3.19 Leakage
IEC 60601-1:2005+AMD1:2012	11.6.4, 13.2.6	

a) Equipment needed for the test:

1) LEAKAGE CURRENT measurement set-up
2) Dielectric strength tester
3) Pipette (IEC 60601-1:1988 only)

b) Safety precautions during the test:

Use normal laboratory safety PROCEDURES during this test.

c) Test sample preparation:

This test should be applied only to ME EQUIPMENT interconnection of tubing for handling of liquids in NORMAL USE.

Liquid tubing interconnection	
Description	**Location**
1)	
2)	
3)	
4)	

One representative test sample.

Do not energize the DUT during this test.

d) Test conditions:

The DUT is positioned as in NORMAL USE.

e) Test set-up and PROCEDURE:

The type of liquid, volume, duration of the leakage and location (point) should be determined through the RISK MANAGEMENT PROCESS to identify the least favourable configuration during NORMAL USE.

After the test, the DUT is to comply with all the requirements of IEC 60601-1:2005+AMD1:2012 for NORMAL CONDITION.

Drops of water were applied by means of a pipette to couplings, to seals, to hoses and to other parts from which leakage might occur (IEC 60601-1:1988 only).

Moving parts are to be in operation or at rest, whichever is least favourable (IEC 60601-1:1988 only).

f) Presentation of the test results:

Immediately following the overflow condition, the dielectric strength test and LEAKAGE CURRENT tests were repeated. The DUT was examined for signs of wetting of uninsulated live parts and/or electrical insulation.

There **was /was no** indication of dielectric breakdown.

LEAKAGE CURRENT testing **remained/did not remain** in compliance.

There **was/was no** wetting of uninsulated electrical parts or electrical insulation of parts that could result in an unacceptable RISK.

IECNORM.COM : Click to view the full PDF of IEC TR 62354:2014

13.3.20 Ingress of water or particulate matter

Standard(s): IEC 60601-1:2005+AMD1:2012	Subclause(s): 11.6.5	13.3.20 Ingress of water or particulate matter

a) Equipment needed for the test:

1) IEC 60529 measurement set-up for IPX1 through IPX8 (for ingress of water)
2) IEC 60529 measurement set-up for IP1X through IP6X (for ingress of particulate matter)
3) LEAKAGE CURRENT measurement set-up
4) Dielectric strength tester

b) Safety precautions during the test:

Use normal laboratory safety PROCEDURES during this test.

c) Test sample preparation:

This test should be applied only to ME EQUIPMENT designed to give a specified degree of protection in accordance with the classification of IEC 60529 against harmful ingress of water or particulate matter.

The first characteristic numeral indicates that:

– the ENCLOSURE provides protection of persons against access to hazardous parts by preventing or limiting the ingress of a part of the human body or an object held by a person;

and simultaneously,

– the ENCLOSURE provides protection of equipment against the ingress of solid foreign objects.

The second characteristic numeral indicates the degree of protection provided by ENCLOSURES with respect to harmful effects on the equipment due to the ingress of water.

Unless otherwise specified, the test samples for each test should be clean and new, with all parts in place and mounted in the manner described by the MANUFACTURER.

Do not energize the DUT during this test.

d) Test conditions:

Place the DUT in the least favourable position of NORMAL USE.

e) Test set-up and PROCEDURE:

IPX1 Test with a drip box in accordance with Figure 3 of IEC 60529:1998.

Place the DUT level in its normal operating position on the turn table. Align the axis of the DUT approximately 100 mm from axis of the turn table. Rotate the table at a rate of 1 /min for at least 10 min. Ensure that the drip box is larger than the ENCLOSURE of the DUT, and that the support is smaller than the ENCLOSURE. Fix a wall or ceiling mounted DUT to a wooden board with dimensions equal to the size of the DUT's mounting surface. Set a flow rate of $1{,}0\ ^{+0{,}5}_{0}$ mm/min.

IPX2 Test with a drip box in accordance with Figure 3 of IEC 60529:1998.

Place the DUT in its normal operating position on an inclinable surface. Incline the surface to 15° for at least 2,5 min in each of four FIXED positions of tilt (total of at least 10 min). Ensure that the drip box is larger than the ENCLOSURE of the DUT, and that the support is smaller than the ENCLOSURE. Fix a wall or ceiling mounted DUT to a wooden board with dimensions equal to the size of the DUT's mounting surface. Set a flow rate of $3{,}0\ ^{+0{,}5}_{0}$ mm/min.

IECNORM.COM : Click to view the full PDF of IEC TR 62354:2014

13.3.20 Ingress of water or particulate matter *(continued)*

Standard(s): IEC 60601-1:2005+AMD1:2012	Subclause(s): 11.6.5	13.3.20 Ingress of water or particulate matter

IPX3 Test with either an oscillating tube according to Figure 4 or a spray head according to Figure 5 of IEC 60529:1998.

Place the DUT on a non-perforated supporting surface in the centre of the spray pattern.

When using an oscillating tube:

– Use a tube radius that is the appropriate size for the DUT ENCLOSURE, but not larger than 1 600 mm. Adjust the flow rate to produce 0,07 l/min ± 5 % per hole multiplied by the number of holes (Table 9 from IEC 60529:1998 details the total water flow rate when using the oscillating tubes).

– Spray at an angle of ± 60° from vertical from a maximum distance of 200 mm. The time to complete one oscillation cycle (2 × 120 °) should be about 4 s.

– Spray the DUT for 5 min, then turn the DUT 90° and spray for 5 min more (total of 10 min).

Use a spray head (rather than an oscillating tube) for ENCLOSURES that require a tube radius greater than 1 600 mm.

– Adjust the flow rate to produce 10 l/min ± 5 %.

– Spray at an angle of ± 60° from vertical from a maximum distance of 200 mm.

– Use the calculated surface area of the enclosure (excluding any mounting surface) to determine the duration of delivery. Spray for 1 min/m^2 of surface area, but for no less than 5 min.

The tube diameter was _____ mm radius; flow rate was _____ l/min.

IPX4 Test with either an oscillating tube according to Figure 4 or a spray head according to Figure 5 of IEC 60529:1998.

Place the DUT on a non-perforated supporting surface in the centre of the spray pattern.

When using an oscillating tube:

– Use a tube radius that is the appropriate size for the DUT ENCLOSURE, but not larger than 1 600 mm. Adjust the flow rate to produce 0,07 l/min ± 5 % per hole multiplied by the number of holes (Table 9 from IEC 60529:1998 for the total water flow rate when using the oscillating tubes).

– Spray at an angle of ± 180° from vertical from a maximum distance of 200 mm when using the oscillating tube. The time to complete one oscillation cycle (2 × 360°) should be about 12 s.

– Spray the DUT for 5 min, then turn the DUT 90° and spray for 5 min more (total of 10 min).

Use a spray head (rather than an oscillating tube) for ENCLOSURES that require a tube radius greater than 1 600 mm.

– Adjust the flow rate to produce 10 l/min ± 5 %.

– Spray at an angle of ± 180° from vertical from a maximum distance of 200 mm.

– Use the calculated surface area of the enclosure (excluding any mounting surface) to determine the duration of delivery. Spray for 1 min/m^2 of surface area, but for no less than 5 min.

The DUT **was/was not** rotated during the test.

The DUT **was/was not** operating during the test.

The tube diameter was _____ mm radius; flow rate was _____ l/min.

IECNORM.COM : Click to view the full PDF of IEC TR 62354:2014

13.3.20 Ingress of water or particulate matter *(continued)*

Standard(s): IEC 60601-1:2005+AMD1:2012	Subclause(s): 11.6.5	13.3.20 Ingress of water or particulate matter

IPX5 Direct a water jet hose nozzle (reference Figure 6 from IEC 60529:1998) with an inside diameter of 6,3 mm at the DUT. Deliver a stream of water at a rate of 12,5 l/min (that has a 40 mm diameter core measured at 2,5 m from the end of the nozzle) at the DUT from a distance of 2.5 m to 3 m. Use the calculated surface area of the exposed DUT surface to determine the duration of spraying. Spray for 1 min/m^2 of the exposed DUT surface, but for no less than 3 min.

IPX6 Direct a water jet hose nozzle (reference Figure 6 from IEC 60529:1998) with an inside diameter of 12,5 mm at the DUT. Deliver a stream of water at a rate of 100 l/min (that has a 120 mm diameter core measured at 2,5 m from the end of the nozzle) at the DUT from a distance of 2,5 m to 3 m. Use the calculated surface area of the exposed DUT surface to determine the duration of spraying. Spray for 1 min/m^2 of the exposed DUT surface, but for no less than 3 min.

IPX7 Completely immerse the DUT (for at least 30 min) in water with a temperature within 5 °C of the temperature of the DUT. Place the DUT in the MANUFACTURER'S specified normal operating position that satisfies the following conditions:

– The lowest point of ENCLOSURES with a height less than 850 mm is 1 000 mm below the surface of the water.

– The highest point of enclosures with a height equal to or greater than 850 mm is 150 mm below the surface of the water

IPX8 Completely immerse the DUT (that is designed to be continuously immersed in NORMAL USE) in water. The MANUFACTURER and users must agree on the test conditions, but those conditions must be more severe than those required for IPX7.

Perform testing for the second characteristic numeral in fresh water. The actual protection may not be satisfactory if high pressure and/or solvents are used for cleaning.

After testing, examine the DUT for signs of wetting of uninsulated live parts and/or electrical insulation.

In general terms, if any water enters the ENCLOSURE, the DUT should show no signs of bridging of insulation (or electrical components) that could result in an unacceptable RISK in NORMAL CONDITION or in combination with a SINGLE FAULT CONDITION (based on a visual inspection) after the appropriate dielectric strength and LEAKAGE CURRENT tests are performed.

IP1X Protected against access to hazardous parts with the back of a hand and against penetration of the ENCLOSURE by solid foreign objects of greater than or equal to 50 mm diameter. Apply the access probe (a sphere of $50^{+0,05}_{0}$ mm diameter) with a force of 50 N ± 10 %.

The probe **did/did not** pass through any applicable opening of the ENCLOSURE while maintaining adequate clearance.

IP2X Protected against access to hazardous parts with a finger and against penetration of the ENCLOSURE by solid foreign objects of greater than or equal to 12,5 mm diameter. Apply the jointed test finger (12 mm diameter, 80 mm length) and the access probe (a sphere of $12{,}5^{+0,2}_{0}$ mm diameter) with a force of 30 N ± 10 %.

The probe **did/did not** pass through any applicable opening of the ENCLOSURE while maintaining adequate clearance.

The jointed test finger may penetrate to its 80 mm length, but the stop face (the 50 mm × 20 mm cross section) must not pass through the opening. Starting from the straight position, bend both joints of the test finger successively through an angle of up to 90° with respect to the axis of the adjoining section of the finger and place the finger in every possible position.

IECNORM.COM : Click to view the full PDF of IEC TR 62354:2014

13.3.20 Ingress of water or particulate matter *(continued)*

Standard(s): IEC 60601-1:2005+AMD1:2012	Subclause(s): 11.6.5	13.3.20 Ingress of water or particulate matter

IP3X Protected against access to hazardous parts with a TOOL and against penetration of the ENCLOSURE by solid foreign objects of greater than or equal to 2,5 mm diameter. Apply the access probe (a test rod of $2{,}5\ ^{+0{,}05}_{0}$ mm diameter) with a force of 3 N ± 10%.

The probe **did/did not** pass through any applicable opening of the ENCLOSURE while maintaining adequate clearance.

IP4X Protected against access to hazardous parts with a wire and against penetration of the ENCLOSURE by solid foreign objects of greater than or equal to 1,0 mm diameter. Apply the access probe (a test wire of $1{,}0\ ^{+0{,}05}_{0}$ mm diameter) with a force of 1 N ± 10 %.

The probe **did/did not** pass through any applicable opening of the ENCLOSURE while maintaining adequate clearance.

IP5X Protected against access to hazardous parts with a wire and limit the ingress of dust into the ENCLOSURE. Apply the access probe (a test wire of $1{,}0\ ^{+0{,}05}_{0}$ mm diameter) with a force of 1 N ± 10 %.

The probe **did/did not** pass through any applicable opening of the ENCLOSURE while maintaining adequate clearance.

When tested according to Subclause 13.2 of IEC 60529:1989, deposits of dust into the ENCLOSURE **did/did not** interfere with DUT operation or result in unacceptable RISKS.

The talcum powder used for this test **did/did not** accumulate in a quantity or at a location such that, along with any other kind of dust, might interfere with the correct DUT operation or impair safety. Dust was not deposited where it could lead to tracking along the CREEPAGE DISTANCES except for specific cases that are clearly described in the instructions for use.

IP6X Protected against access to hazardous parts using a wire and limits the ingress of dust into the ENCLOSURE. Apply the access probe (a test wire of $1{,}0\ ^{+0{,}05}_{0}$ mm diameter) with a force of 1 N ± 10 %.

The probe **did/did not** pass through any applicable opening on the ENCLOSURE while maintaining adequate clearance.

When tested according to Subclause 13.2 of IEC 60529:1989, deposits of dust **were/were not** observed inside the ENCLOSURE after the test.

Push the access probe against or (in the case of the test for first characteristic numeral 2, inserted) through any openings of the ENCLOSURE with the force specified in Table 6 of IEC 60529:1989.

IECNORM.COM : Click to view the full PDF of IEC TR 62354:2014

13.3.20 Ingress of water or particulate matter *(continued)*

Standard(s): IEC 60601-1:2005+AMD1:2012	Subclause(s): 11.6.5	13.3.20 Ingress of water or particulate matter
f) Presentation of the test results: The DUT was tested for IP __ __ or IPX __ or IP __ X If any water has entered the ENCLOSURE: Immediately after testing for the ingress of liquids or particulate matter, repeat the dielectric strength test and LEAKAGE CURRENTS tests. – The particulate test apparatus **did/did not** fully penetrate the appropriate openings. – The particulate test apparatus **did/did not** maintain sufficient clearance from hazardous parts. – For IP5X, dust protection **is/is not** provided in accordance with Table 2 from IEC 60529:1998. – For IP6X, dust tightness **is/is not** provided in accordance with Table 2 from IEC 60529:1998. – An unacceptable RISK **did not/did** occur in NORMAL CONDITION and any applicable SINGLE FAULT CONDITION as determined by IEC 60601-1: 2005. – There **were /were no** indications of dielectric breakdown.		
– The DUT **continues/does not continue** to pass LEAKAGE CURRENT tests. – The DUT **continues/does not continue** to operate correctly and BASIC SAFETY and ESSENTIAL PERFORMANCE **was/was not** impaired. – After any IPXN testing, inspection **shows no signs/shows signs** of wetting of safety insulation or electrical parts. – There **was/was no** water deposit on insulation parts that could lead to tracking along the CREEPAGE DISTANCES. – There **was/was no** water deposit that could reach live parts or windings not designed to operate when wet. – There **was/was no** water accumulation near any cable end or entry onto the cable.		

IECNORM.COM : Click to view the full PDF of IEC TR 62354:2014

13.3.21 Cleaning, sterilization and disinfection

Standard(s):	Subclause(s):	13.3.21 Cleaning, sterilization and disinfection
IEC 60601-1:2005+AMD1:2012	11.6.6, 11.6.7	

a) Equipment needed for the test:

1) Cleaning agents or disinfectants or sterilizers (industrial moist heat sterilization or ethylene oxide sterilization or radiation sterilization) as specified in the instructions for use
2) Dielectric strength tester
3) LEAKAGE CURRENT measurement set-up

b) Safety precautions during the test:

Switch the ME EQUIPMENT ON or OFF during cleaning PROCEDURE in accordance with the instructions for use.

c) Test sample preparation:

Prepare the ME EQUIPMENT itself or parts of ME EQUIPMENT or APPLIED PARTS as described in the instructions for use.

d) Test conditions:

Cleaning or disinfection as described in the instructions for use, sterilization PROCESS according to standards ISO 17665-1 (industrial moist heat), ISO 11135-1 (ethylene oxide) or ISO 11137-1 (radiation).

Environmental conditions as specified in the technical description.

e) Test set-up and PROCEDURE:

1) Clean and disinfect the ME EQUIPMENT, ACCESSORIES and APPLIED PARTS in accordance with the MANUFACTURERS' instructions (i.e. cleaning or disinfection materials and methods). If more than one material or method is listed, use each in turn.
2) Sterilize the ME EQUIPMENT, ACCESSORIES and APPLIED PARTS in accordance with the MANUFACTURERS' instructions.
3) After cleaning and sterilization, visually inspect the parts for damage that might result in an unacceptable RISK. Perform applicable dielectric strength tests and LEAKAGE CURRENT tests as described in this document.

f) Presentation of the test results:

Visually inspect any parts of the DUT exposed to the cleaning agent to verify that deterioration did not occur.

List each item cleaned, disinfected or sterilized in the table below. Include the cleaning material and cleaning or sterilization method and the visual inspection results and compliance with dielectric strength and LEAKAGE CURRENT.

TABLE: Cleaning, disinfection and sterilization

Item cleaned, disinfected or sterilized	Cleaning, disinfection or sterilization material	Cleaning, disinfection, or sterilization method	Visual inspection results	Dielectric strength results	LEAKAGE CURRENT results

IECNORM.COM : Click to view the full PDF of IEC TR 62354:2014

13.3.22 Push (rigidity)

Standard(s):	Subclause(s):	13.3.22 Push (rigidity)
IEC 60601-1:2005+AMD1:2012	15.3.2	

a) Equipment needed for the test:

1) Force gauge
2) Dielectric strength tester
3) Watch
4) Scale (for weighing the DUT)
5) Callipers or gauge pins

b) Safety precautions during the test:

Use normal laboratory safety PROCEDURES during this test.

c) Test sample preparation:

One representative sample with fully loaded options/ACCESSORIES, consisting of the complete ENCLOSURE, or a portion thereof representing the largest unreinforced area, is supported in its normal position.

d) Test conditions:

For ME EQUIPMENT with non-metallic ENCLOSURES, this test is performed at the maximum ambient temperature indicated in the technical description for NORMAL USE.

Do not energize the DUT during this test.

e) Test set-up and PROCEDURE:

External parts of an ENCLOSURE are subject to a steady force of 250 N ± 10 N for a period of 5 s, applied by means of a suitable test TOOL providing contact over a circular plane surface 30 mm in diameter.

f) Presentation of the test results:

The ENCLOSURE was pushed at the points indicated below.

Material	Pushed area	Observations
1)		
2)		
3)		
4)		

There **was /was no** cracking of the ENCLOSURE that could cause an unacceptable RISK.

There **was /was no** reduction of CREEPAGE DISTANCES and AIR CLEARANCES.

There **were /were no** live parts that became accessible.

Subject the appropriate MEANS OF PROTECTION(S) to the applicable dielectric strength test(s).

There **was /was not** an indication of dielectric strength breakdown.

TABLE: Dielectric strength test

Location	Test voltage V	Time

IECNORM.COM : Click to view the full PDF of IEC TR 62354:2014

13.3.23 Impact

Standard(s):	Subclause(s):	13.3.23 Impact
IEC 60601-1:2005+AMD1:2012	15.3.3	

a) Equipment needed for the test:

1) Steel sphere approximately 50 mm in diameter and with a mass of 500 g ± 25 g
2) Dielectric strength tester
3) Pendulum apparatus
4) Callipers or gauge pins.

b) Safety precautions during the test:

Use normal laboratory safety PROCEDURES during this test.

c) Test sample preparation:

One representative sample with fully loaded options/ACCESSORIES, consisting of the complete ENCLOSURE, or a portion thereof representing the largest unreinforced area, is supported in its normal position.

Cathode ray tubes, flat panel displays and platen glass are excluded.

d) Test conditions:

Do not energize the DUT during this test. Support the DUT such that it is rigidly held in place during impact.

e) Test set-up and PROCEDURE:

1) The solid smooth steel ball is permitted to fall freely from a 1,3 m height once onto each relevant part of the ENCLOSURE (so as to strike the ENCLOSURE with an impact of 6,78 Nm).
2) To test vertical surfaces, the steel ball may be suspended by a cord and allowed to swing like a pendulum in order to apply a horizontal impact, dropping though a vertical distance of 1,3 m once against each relevant part of the ENCLOSURE.

f) Presentation of the test results:

The ENCLOSURE was struck at the points indicated below.

Material	Impacted area	Remarks
1)		
2)		
3)		
4)		

IECNORM.COM : Click to view the full PDF of IEC TR 62354:2014

13.3.23 Impact *(continued)*

Standard(s): IEC 60601-1:2005	Subclause(s): 15.3.3	13.3.23 Impact

After the test, the DUT or the DUT parts should not present an unacceptable RISK.

There **was /was no** cracking of the ENCLOSURE that could cause an unacceptable RISK.

There **were /were no** barriers damaged or loosened.

There **was /was no** damage that could cause moving parts to become hazardous.

There **was /was no** damage that could cause spread of fire.

Subject the appropriate MEANS OF PROTECTION(S) to the applicable dielectric strength test(s).

There **was /was no** indication of dielectric strength breakdown.

TABLE: Dielectric strength test		
Location	**Test voltage** V	**Time**

IECNORM.COM : Click to view the full PDF of IEC TR 62354:2014

13.3.24 Drop impact

Standard(s): IEC 60601-1:2005+AMD1:2012	Subclause(s): 15.3.4	13.3.24 Drop impact

a) Equipment needed for the test:

1) Hardwood surface 50 mm thick
2) Tape measure or steel rule
3) Dielectric strength tester
4) Callipers or gauge pins

b) Safety precautions during the test:

Use normal laboratory safety PROCEDURES during this test.

c) Test sample preparation:

One representative sample with fully loaded options/ACCESSORIES, etc.

d) Test conditions:

Do not energize the DUT during this test.

e) Test set-up and PROCEDURE:

1) HAND-HELD ***DUT:***

The DUT, with any SAFE WORKING LOAD in place, is allowed to fall freely once from each of three different starting orientations encountered during NORMAL USE from the height at which the ME EQUIPMENT, ACCESSORY or ME EQUIPMENT part is used, or, if not defined in the ACCOMPANYING DOCUMENTS, from a height of 1 m, whichever is greater, onto a 50 mm ± 5 mm thick hardwood board (for example, hardwood > 600 kg/m^3) lying flat on a concrete or a similar rigid base.

2) PORTABLE ***DUT:***

The DUT, with the SAFE WORKING LOAD in place, is lifted to a height as indicated in Table 5 above a 50 mm ± 5 mm thick hardwood board (for example, > 600 kg/m^3) that lies flat on a concrete floor or a similar rigid base. The dimensions of the board should be at least that of the DUT. The DUT is dropped three times from each orientation in which it may be placed during NORMAL USE.

Table 8 – Drop height

(IEC 60601-1:2005, Table 29)

Mass (*m*) of PORTABLE ME EQUIPMENT or PORTABLE ME EQUIPMENT parts kg	**Drop height** cm
$m \leq 10$	5
$10 < m \leq 50$	3
$m > 50$	2

IECNORM.COM : Click to view the full PDF of IEC TR 62354:2014

13.3.24 Drop impact *(continued)*

Standard(s):	Subclause(s):	13.3.24 Drop impact
IEC 60601-1:2005+ A1:2012	15.3.4	

f) Presentation of the test results:

After the test, the DUT or DUT parts may not present any unacceptable RISK.

The following are examples of items that are inspected after the test:

– Parts, which are hazardous live, **have /have not** become accessible.

– ENCLOSURES **show /show no** cracks that could cause an unacceptable RISK.

– AIR CLEARANCES **are /are not** less than their permitted values and the insulation of internal wiring remains undamaged.

– Barriers **have /have not** been damaged or loosened.

– There **has been /has been no** damage, which could cause moving parts to become hazardous.

– There **has been /has been no** damage that could cause spread of fire.

– There **was/was no** damage to the interior or exterior of the DUT.

Subject the appropriate MEANS OF PROTECTION(S) to the applicable dielectric strength test(s).

There **was/was no** indication of dielectric strength breakdown.

TABLE: Dielectric strength test		
Location	**Test voltage** V	**Time**

IECNORM.COM : Click to view the full PDF of IEC TR 62354:2014

13.3.25 Rough handling

Standard(s):	Subclause(s):	13.3.25 Rough handling
IEC 60601-1:2005+AMD1:2012	15.3.5	

a) Equipment needed for the test:

1) A solid hardwood vertical obstacle having a width and thickness of 40 mm
2) A FIXED horizontal obstacle having a height of 40 mm
3) A FIXED horizontal descending step having a height of 40 mm
4) Means to measure the speed
5) Dielectric strength tester
6) Callipers or gauge pins
7) Scale (for weighing the DUT)

b) Safety precautions during the test:

Use normal laboratory safety PROCEDURES during this test. Suitable precautions shall be taken to prevent over-balance caused by the rough handling stress/shock.

c) Test sample preparation:

One representative sample of MOBILE ME EQUIPMENT in transport position, with any SAFE WORKING LOAD in place and in the most adverse condition permitted in NORMAL USE.

d) Test conditions:

Do not energize the DUT during this test.

e) Test set-up and PROCEDURE:

1) ***Ascending step shock:***

The DUT is pushed three times in its normal direction of travel at a speed of 0,8 m/s ± 0,1 m/s, or, for a motor-driven DUT, at the maximum speed capable of being maintained, against a solid hardwood plane obstruction with a face of 40 mm that is rigidly attached to an otherwise flat floor. The direction of movement is perpendicular to the face of the obstacle. The DUT need not go over the 40 mm obstruction.

2) ***Descending step shock:***

The DUT is moved three times in its normal direction of travel at a speed of 0,8 m/s ± 0,1 m/s, or, for a motor-driven DUT, at the maximum speed capable of being maintained, in order to fall over a vertical step having a height of 40 mm affixed flat on a rigid base (e.g. concrete). The direction of movement is perpendicular to the face of the descending step.

3) ***Door frame shock:***

The DUT is moved three times in its normal direction of travel at a speed of 0,8 m/s ± 0,1 m/s, or, for motor driven MOBILE DUT, the maximum speed capable of being maintained, against a hardwood vertical obstacle having a width and thickness of 40 mm affixed to a vertical rigid support (e.g. concrete). The height of the vertical obstacle should be higher than the DUT contact point(s). The direction of movement is perpendicular to the face of the obstacle.

IECNORM.COM : Click to view the full PDF of IEC TR 62354:2014

13.3.25 Rough handling *(continued)*

Standard(s):	Subclause(s):	13.3.25 Rough handling
IEC 60601-1:2005+AMD1:2012	15.3.5, 9.4.2.4.3	

f) Presentation of the test results:

After the tests, the DUT or DUT parts should not present an unacceptable RISK.

The mechanical integrity of the DUT **was/was not** maintained during test 1).

The mechanical integrity of the DUT **was/was not** maintained during test 2).

The mechanical integrity of the DUT **was/was not** maintained during test 3).

Measured CREEPAGE DISTANCES and AIR CLEARANCES were **satisfactory/non-satisfactory** after the tests.

Visually inspect the DUT for any damage that might constitute an unacceptable RISK (e.g. ENCLOSURE openings that allow access to hazardous parts).

Subject the appropriate MEANS OF PROTECTION to the applicable dielectric strength test(s).

There **was/was no** indication of dielectric strength breakdown.

TABLE: Dielectric strength test		
Location	**Test voltage V**	**Time**

IECNORM.COM : Click to view the full PDF of IEC TR 62354:2014

13.3.26 Mould stress relief

Standard(s):	Subclause(s):	13.3.26 Mould stress relief
IEC 60601-1:2005	15.3.6	

a) Equipment needed for the test:

1) Circulating air oven with calibrated temperature measuring device
2) Calliper
3) Watch/clock
4) Finger probe, test pin, test hook, rigid finger.

b) Safety precautions during the test:

Use normal laboratory safety PROCEDURES during this test.

c) Test sample preparation:

This test applies only to ME EQUIPMENT with ENCLOSURES of moulded or formed thermoplastic materials.

One representative sample, consisting of the complete ENCLOSURE, or of the ENCLOSURE together with any supporting framework.

For large ME EQUIPMENT, condition a portion of the ENCLOSURE representative of the complete assembly with regard to thickness and shape, including any mechanical support members.

The selected samples are derived from portions of the ENCLOSURE based on the potential effects of mould stress relief, such as corners or where the moulding material must flow into restricted areas where cooling of the material could result in stresses.

d) Test conditions:

Do not energize the DUT during this test.

e) Test set-up and PROCEDURE:

Place the DUT in the circulating air oven at a temperature 10 °C higher than the maximum temperature observed on the ENCLOSURE during the heating test, but not less than 70 °C, for a period of 7 h, then permitted to cool to room temperature.

NOTE Relative humidity need not be maintained at a specific value during this conditioning.

f) Presentation of the test results:

There is not to be any damage resulting in an unacceptable RISK, including warping, cracking, breaking or other alterations.

There **was/was no** cracking of the ENCLOSURE that could cause an unacceptable RISK.

There **were /were no** barriers damaged or loosened.

There **was/was no** damage that could result in reduction of CREEPAGE DISTANCES and AIR CLEARANCES.

There **was/was no** warping that enabled access to hazardous parts using the test pin, test finger and test hook.

TABLE: Mould stress relief

Part under test	Oven temperature °C	Time h	Remarks

IECNORM.COM : Click to view the full PDF of IEC TR 62354:2014

13.3.27 Actuating parts of controls (Knob pull and limitation of movement)

Standard(s): IEC 60601-1:2005+AMD1:2012	Subclause(s): 15.4.6.1, 15.4.6.2	13.3.27 Actuating parts of controls (Knob pull and limitation of movement)
a) Equipment needed for the test: 1) Force gauge with a range of at least 60 N to 100 N 2) Chronometer (stop watch) 3) Torque meter with a range of at least 1,0 Nm to 6,0 Nm 4) Callipers or gauge pin		
b) Safety precautions during the test: Use normal laboratory safety PROCEDURES during this test.		
c) Test sample preparation: The sample should be securely mounted.		
d) Test conditions: Do not energize the DUT during this test.		
e) Test set-up and PROCEDURE: 1) Where an axial pull is required in NORMAL USE, or is likely to be applied to the rotating or moveable parts of controls in NORMAL USE, an axial force of 60 N for electrical components and 100 N for other components was applied for 1 min to the OPERATOR accessible knobs indicated below and in a direction to affect their removal. During this test, no torque was applied. 2) For rotating controls and stops, the torques as shown in Table 9 are applied between the control knob and the shaft for not less than 2 s in each direction alternately. The test is repeated 10 times. The knob should not rotate with respect to the shaft.		

IECNORM.COM : Click to view the full PDF of IEC TR 62354:2014

13.3.27 Actuating parts of controls (Knob pull and limitation of movement) *(continued)*

Standard(s):	Subclause(s):	13.3.27 Actuating parts of controls (knob pull and limitation of movement)
IEC 60601-1:2005+AMD1:2012	15.4.6.1, 15.4.6.2	

Table 9 – Test torques for rotating controls

(IEC 60601-1:2005, Table 30)

Gripping diameter (*d*) of control knob mm [a]	Torque Nm
$0 \leq d < 23$	1,0
$23 \leq d < 31$	2,0
$31 \leq d < 41$	3,0
$41 \leq d < 56$	4,0
$56 \leq d \leq 70$	5,0
$d > 70$	6,0

[a] The gripping diameter (*d*) is the maximum width of a control knob regardless of its shape (e.g. control knob with pointer.

f) Presentation of the test results:

Type	Knob location	Securement	Force N
1)			
2)			
3)			

The knob **did/did not** rotate on the shaft to give an incorrect indication.

The knob **could/could not** be removed and replaced in a way to give an incorrect indication.

The knob **did/did not** break.

The stop **did/did not** prevent additional rotation.

An axial pull **did/did not** cause the knob to become displaced or caused unexpected change of the controlled parameter.

IECNORM.COM : Click to view the full PDF of IEC TR 62354:2014

13.3.28 Construction of transformers

Standard(s): IEC 60601-1:2005	Subclause(s): 15.5.3	13.3.28 Construction of transformers

a) Equipment needed for the test:

1) Standard gauges
2) Callipers with magnifying feature or additional magnifying equipment
3) Tools to dismantle the transformer

b) Safety precautions during the test:

Use normal laboratory safety PROCEDURES during this test.

c) Test sample preparation:

Do not energize the DUT during this test.

d) Test conditions:

See 13.3.7.

e) Test set-up and PROCEDURE:

See 13.3.7 for the general procedure.

– Means shall be provided to prevent displacement of end turns beyond the interwinding insulation.

– If a protective earthed screen has only one turn, it shall have an insulated overlap of not less than 3 mm. The width of the screen shall be at least equal to the axial winding length of the primary winding.

– The exit of the wires from the internal windings of toroidal transformers shall be provided with double sleeving complying with the requirements for two MEANS OF PROTECTION and having a total wall thickness of at least 0,3 mm, extending at least 20 mm outside the winding.

– The insulation between primary and secondary windings shall comply with 8.8.2.

– CREEPAGE DISTANCES and AIR CLEARANCES shall comply with 8.9.4 with the following exceptions:

  • Enamelled or lacquered winding wires are considered as contributing 1 mm each to the CREEPAGE DISTANCES specified in 8.9.4 for MEANS OF PATIENT PROTECTION.

  • CREEPAGE DISTANCES are measured through the joint between two parts of an insulation barrier, except when:

    – either the two parts forming the joint are bonded by heat sealing or other similar means at the place where this is of importance; or

    – the joint is completely filled with adhesive at the necessary places and the adhesive bonds to the surfaces of the insulating barrier so that humidity cannot be sucked into the joint.

– CREEPAGE DISTANCES within moulded transformers are considered not to exist if it can be shown that no gas bubbles are present and the thickness of the insulation between enamelled or lacquered primary and secondary windings is at least 1 mm for reference voltages U not exceeding 250 V and increased proportionally for higher reference voltages.

IECNORM.COM : Click to view the full PDF of IEC TR 62354:2014

13.3.28 Construction of transformers *(continued)*

Standard(s): IEC 60601-1:2005	Subclause(s): 15.5.3	13.3.28 Construction of transformers)

f) Presentation of the test results:

Means **was/was not** provided to prevent displacement of end turns beyond the interwinding insulation.

A protective earthed screen with only one turn **had/had not** an insulated overlap of not less than 3 mm.

The width of the screen **was/was not** at least equal to the axial winding length of the primary winding.

The exit of the wires from the internal windings of toroidal transformers **was/was not** provided with double sleeving complying with the requirements for two MEANS OF PROTECTION and having a total wall thickness of at least 0,3 mm, extending at least 20 mm outside the winding.

The insulation between primary and secondary windings shall comply with 8.8.2.

The results of the measurements are specified in the table.

TABLE: CREEPAGE DISTANCE and AIR CLEARANCE

Insulation under test (area from insulation diagram)	Insulation type: (BI-BASIC / SI-SUPPLEMENTARY / DI-DOUBLE / RI-REINFORCED) (for IEC 60601-1:1988) (Functional / one MOOP / two MOOP / one MOPP/ two MOPP) (for IEC 60601-1:2005)	CREEPAGE DISTANCE mm	AIR CLEARANCE mm	Remarks
Primary – secondary				
Primary – core				
Secondary – core				
Screen overlap				
Extension of sleeving				
Thickness of sleeving				
Thickness of bubble free moulding				

IECNORM.COM : Click to view the full PDF of IEC TR 62354:2014

13.4 Measurements and tests for equipment that is operating

Table 10 lists those measurements and tests that are performed while the DUT is operating.

Table 10 – Measurements and tests for equipment that is operating

Test per IEC/TR 62354		Clause in IEC 60601-1:1988	Clause in 60601-1:2005
No.	Description		
13.4.1	ESSENTIAL PERFORMANCE – Functional		4.3
13.4.2	Power consumption (input) single phase and polyphase	7.1	4.11
13.4.3	Voltage mismatch		5.4 a), 8.1
13.4.4	Limitation of voltage, current or energy	15	8.4.3; 8.4.4
13.4.5	DEFIBRILLATION-PROOF APPLIED PART protection	17 h)	8.5.5.1
13.4.6	Energy reduction		8.5.5.2
13.4.7	EARTH LEAKAGE CURRENT	19.4 f)	8.7.4.5
13.4.8	TOUCH CURRENT	19.4 g)	8.7.4.6
13.4.9	PATIENT LEAKAGE CURRENT	19.4 h)	8.7.4.7, 8.7.4.9
13.4.10	PATIENT LEAKAGE CURRENT with mains on F-TYPE APPLIED PART	19.4	8.7.4.7 b)
13.4.11	PATIENT LEAKAGE CURRENT with mains on SIP/SOP	19.4	8.7.4.7 c)
13.4.12	PATIENT AUXILIARY CURRENT	19.4 j)	8.7.4.8
13.4.13	WORKING VOLTAGE measurement	20.3	8.5.4, 8.10.4.1
13.4.14	Sound pressure level measurement		9.6.2.1
13.4.15	Hydrostatic pressure	45	9.7.5
13.4.16	X-radiation (ionizing radiation) measurement	29.2	10.1
13.4.17	Normal heating	42	11.1
13.4.18	Operation to a specified temperature	10.2.1, 4.5	5.3
13.4.19	Identification of source of ignition		11.2.2.1
13.4.20	Interruption of power supply	49	11.8
13.4.21	Limited power circuit		13.1.2
13.4.22	Failures of THERMOSTATS	52.5.2	13.2.4
13.4.23	Impairment of cooling	52.5.5, 52.5.10 c), 56.6	13.2.7
13.4.24	Locking of moving parts	52.5.6	13.2.8
13.4.25	Interruption or short circuit of motor capacitors	52.5.7	13.2.9
13.4.26	Motor running overload	52.5.10 f)	13.2.13.3 b), 13.2.13.4
13.4.27	Heating element overload	52.5.10	13.2.13.1, 13.2.13.2
13.4.28	Rechargeable battery overcharge/discharge		15.4.3
13.4.29	Mains transformers	57.9	15.5; 13.2.3

IECNORM.COM : Click to view the full PDF of IEC TR 62354:2014

13.4.1 ESSENTIAL PERFORMANCE – Functional

Standard(s): IEC 60601-1:2005+AMD1:2012	Subclause: 4.3	13.4.1 ESSENTIAL PERFORMANCE – Functional

a) Equipment needed for the test:

As specified in the RISK MANAGEMENT FILE.

b) Safety precautions during the test:

Use normal laboratory safety PROCEDURES during this test as specified in the RISK MANAGEMENT FILE.

c) Test sample preparation:

Make the relevant supply circuit available (see Annex D).

Prepare the sample as specified in the RISK MANAGEMENT FILE.

d) Test conditions:

NORMAL CONDITION as specified in the RISK MANAGEMENT FILE.

e) Test set-up and PROCEDURE:

The RISK MANAGEMENT FILE is inspected to assure that the MANUFACTURER has identified ESSENTIAL PERFORMANCE. The DUT is operated to assure that all identified ESSENTIAL PERFORMANCE characteristics are maintained in NORMAL USE and following particular test(s).

f) Presentation of the test results:

The MANUFACTURER **has/has not** provided RECORDS in the RISK MANAGEMENT FILE that show OBJECTIVE EVIDENCE that ESSENTIAL PERFORMANCE as defined:

– in the RISK MANAGGEMENT FILE and/or

– in IEC 60601-1 series

is maintained.

TABLE: ESSENTIAL PERFORMANCE identified

Clinical function	ESSENTIAL PERFORMANCE identified	Remarks	Supporting documentation

IECNORM.COM : Click to view the full PDF of IEC TR 62354:2014

13.4.1 ESSENTIAL PERFORMANCE – Functional *(continued)*

Standard(s): IEC 60601-1:2005+AMD1:2012	Subclause: 4.3	13.4.1 ESSENTIAL PERFORMANCE – Functional

Demonstration of OBJECTIVE EVIDENCE could be done by functional test.

TABLE: Functional Tests		
ESSENTIAL PERFORMANCE identified	**Functional tests conducted or verification of provided documents**	**Observed outcome**

IECNORM.COM : Click to view the full PDF of IEC TR 62354:2014

13.4.2 Power consumption (input) single phase and polyphase

Standard(s):	Subclause(s):	13.4.2 Power consumption (input) single phase and polyphase
IEC 60601-1:2005+AMD1:2012	4.11	

a) Equipment requested for the testing:

1) Adjustable regulated a.c. power supply 1 – 270 V, 50/60 Hz, 15 A or other similar voltage and frequency depending on input RATING of ME EQUIPMENT
2) Suitable true r.m.s. or average responding, true r.m.s. calibrated voltmeters, ammeters
3) Power analyzer (broadband digital complex waveform VAW meter)
4) Suitable load resistors and/or optional ACCESSORIES
5) Assorted interconnection cables

b) Safety precautions during the test:

It is important to determine the correct type of power input circuit to use for the DUT.

Use normal laboratory safety PROCEDURES during this test.

c) Test sample preparation:

One representative sample loaded with all optional ACCESSORIES

d) Test conditions:

NORMAL CONDITION using maximum loading according to ACCOMPANYING DOCUMENTS (e.g. printers operating, batteries fast charging, cutting…).

e) Test set-up and PROCEDURE:

1) Connect normal load to the DUT and operate the DUT under the most severe conditions of NORMAL USE until the input has reached a stable value.
2) Measure and record the input current, power or volt-amperes at the lowest and highest RATED voltage (when provided as a range). Measure at each NOMINAL marked setting when scalable. Measure at the NOMINAL marked voltage when singular.

   The steady state or average current is measured with a true r.m.s. reading instrument.

   RATED input power, if expressed in volt-amperes, is either measured with a volt-ammeter or determined as the product of the steady state current (measured as described above) and the supply voltage.

f) Presentation of the test results:

TABLE: Power consumption					
Operating condition	**Voltage**	**Frequency**	**Current**	**Power**	**Remarks**

The DUT **is/is not** marked in accordance with Subclause 7.2.7 of IEC 60601-1:2005

The measured input of the ME EQUIPMENT at RATED voltage and at operating settings specified by the MANUFACTURER is not to exceed the marked rating by more than 10 %.

The measured input current/power **did not exceed/exceeded** 110 % of the DUT ratings.

IECNORM.COM : Click to view the full PDF of IEC TR 62354:2014

13.4.3 Voltage mismatch

Standard(s):	Subclause:	13.4.3 Voltage mismatch
IEC 60601-1:2005+AMD1:2014	5.4 a), 8.1	

a) Equipment needed for the test:

1) Dielectric strength tester
2) Power supply capable of providing voltages specified on equipment ratings label

b) Safety precautions during the test:

Use normal laboratory safety PROCEDURES during this test.

c) Test sample preparation:

Make the relevant supply circuit available (see Annex D).

d) Test conditions:

NORMAL CONDITION

e) Test set-up and PROCEDURE:

1) A DUT provided with an OPERATOR adjustable voltage selector is mounted and OPERATED as intended.
2 Place the DUT on a white tissue paper covered softwood surface and draped with a single layer of cheesecloth.
3 The input voltage selector switch is set to the lowest voltage setting and is then energized from a source of supply equivalent to the highest RATED voltage value.
4) The input voltage selector switch is set to the highest voltage setting, and is then energized from a source of supply equivalent to the lowest RATED voltage value.
5) Tests that resulted in opening of components or component damage are followed by a dielectric strength test.

f) Presentation of the test results:

TABLE: Voltage mismatch

Model	Sample No.	Test	Selector switch voltage setting	Applied voltage V	Remarks

There **was/was no** emission of flame or molten metal or insulation damage.

There **was/was no** ignition or charring of cheesecloth.

There **was/was no** glowing or flaming of the tissue paper.

IECNORM.COM : Click to view the full PDF of IEC TR 62354:2014

13.4.4 Limitation of voltage, current or energy

Standard(s):	Subclause(s):	13.4.4 Limitation of voltage, current or energy
IEC 60601-1:2005+AMD1:2012	8.4.3, 8.4.4	

a) Equipment needed for the test:

1) Digital storage scope with 100:1 probe (for adequate impedance, limiting discharge through scope)
2) Capacitance measuring device
3) Disconnection device (1 s switch box)
4) A variable source of AC power supply

b) Safety precautions during the test:

Use normal laboratory safety PROCEDURES during this test.

c) Test sample preparation:

One representative test sample.

d) Test conditions:

Make the relevant supply circuit available (see Annex D).

This test applies to ME EQUIPMENT intended to be connected to a power source by a plug and to ME EQUIPMENT which consists of internal capacitive circuits.

Where appropriate, a d.c. input voltage equal to the peak of the RATED SUPPLY MAINS voltage may be used.

e) Test set-up and PROCEDURE:

1) Operate the DUT at RATED voltage or at the upper limit of the RATED voltage range.
2) Disconnect the DUT from the power source with any relevant switch in the “On” and “Off” positions.
3) Either the DUT is disconnected from the power source by means of the plug, in which case the test is performed as many times as necessary to allow the worst case to be measured, or a triggering circuit is used to ensure that disconnection occurs at the peak of the supply voltage waveform.) It may be beneficial to measure the capacitance using a capacitance measurement device and then calculating the energy.
4) Any ACCESS COVERS preventing access to the capacitors, present in NORMAL USE are removed as quickly as normally possible. The voltage between the pins of the plug and between any pin and the ENCLOSURE is measured 1 s after disconnection with an instrument the internal impedance of which does not affect the test. If greater than 60 V, the energy is calculated with the formula $E = 0{,}5 \times CV^2$.
5) Measure or calculate the stored charge by any convenient method.

   The stored energy is calculated from the following equation:

$$J = 5 \times 10^{-7}\ CV^2$$

   Where J is the stored energy in joules;
   C is the capacitance in microfarads;
   V is the voltage across the capacitor terminals.

6) Consider visual inspection and inspection of ACCOMPANYING DOCUMENTS.

IECNORM.COM : Click to view the full PDF of IEC TR 62354:2014

13.4.4 Limitation of voltage, current or energy *(continued)*

Standard(s):	Subclause(s):	13.4.4 Limitation of voltage, current or energy
IEC 60601-1:2005+AMD1:2012	8.4.3, 8.4.4	

f) Presentation of the test results:

TABLE: Residual voltage in attachment plug	
Voltage measured between:	**Worst case measured voltage** V
Supply pins (pin 1 & pin 2)	
Line pin 1 and ENCLOSURE	
Line pin 2 and ENCLOSURE	
Line pin 1 and earth pin	
Line pin 2 and earth pin	

The highest voltage measurement **did/did not** exceed 60 V.

TABLE: Residual voltage or energy in capacitors				
Capacitor and its location	**Residual voltage** V	**Access time after disconnection** s	**Capacitance value** µF	**Stored charge** µC

The residual voltage at the plug **did/did not** exceed 60 V.

The stored charge at the plug **does /does not** exceed 45 µC.

The residual voltage of internal capacitors after ACCESS COVERS have been removed **does /does not** exceed 60 V.

The stored charge of internal capacitors after ACCESS COVERS have been removed **does /does not** exceed 45 µC.

IECNORM.COM : Click to view the full PDF of IEC TR 62354:2014

13.4.5 DEFIBRILLATION-PROOF APPLIED PART protection

Standard(s):	Subclause(s):	13.4.5 DEFIBRILLATION-PROOF APPLIED PART protection
IEC 60601-1:2005+AMD1:2012	8.5.5.1	

a) Equipment needed for the test:

1) Test circuits as shown in Figure 14 and Figure 15
2) Storage oscilloscope

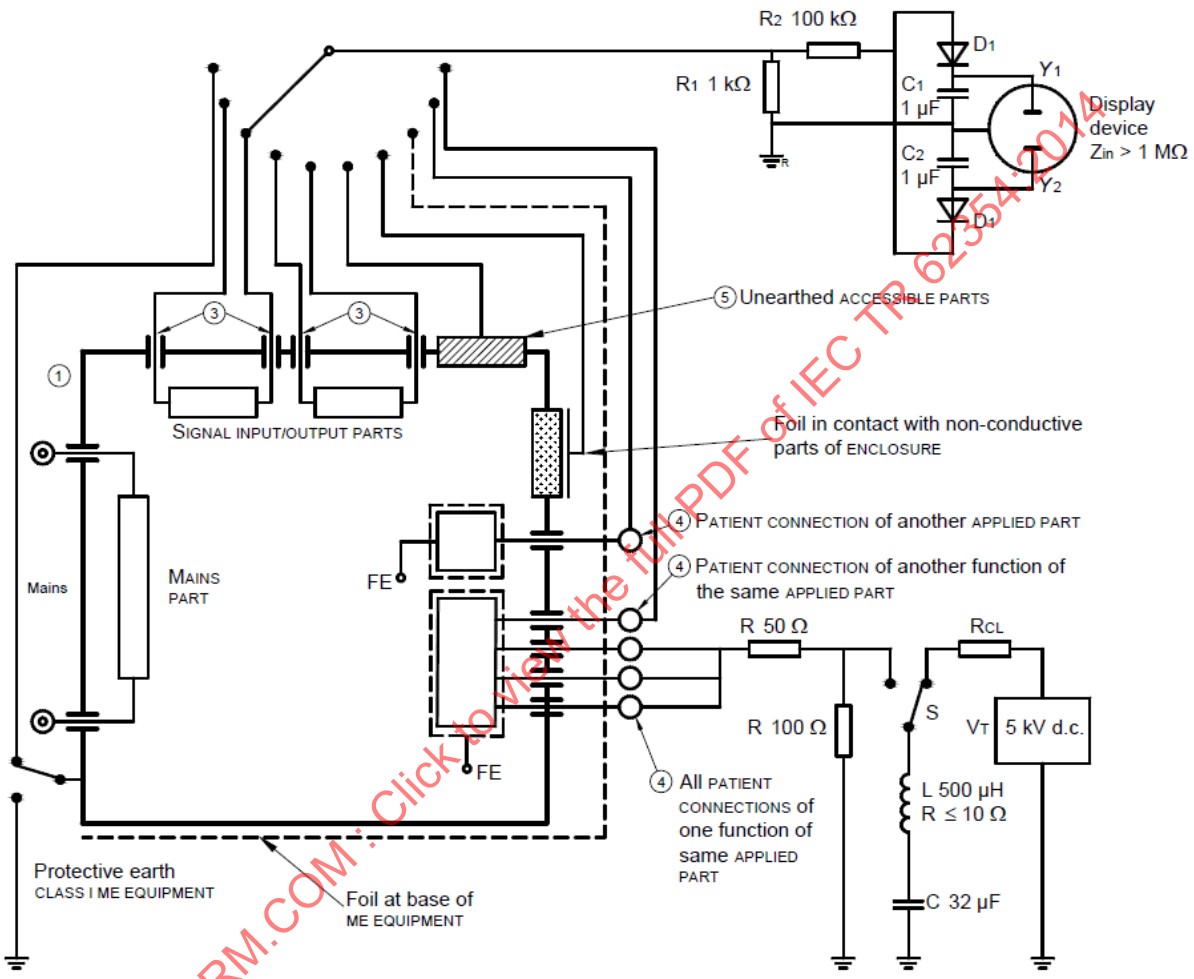

Components

V_T	Test voltage
S	Switch for applying the test voltage
R_1, R_2	Tolerance at ± 2 %, not less than 2 kV
R_{CL}	Current limiting resistor
D_1, D_2	Small signal silicon diodes

Other components tolerance at ± 5 %

Figure 14 – Application of test voltage to bridged PATIENT CONNECTIONS (common mode) for DEFIBRILLATION-PROOF APPLIED PARTS

(IEC 60601-1:2005+AMD1:2012, Figure 9)

IECNORM.COM : Click to view the full PDF of IEC TR 62354:2014

13.4.5 DEFIBRILLATION-PROOF APPLIED PART protection *(continued)*

Standard(s):	Subclause(s):	13.4.5 DEFIBRILLATION-PROOF APPLIED PART protection
IEC 60601-1:2005+AMD1:2012	8.5.5.1	

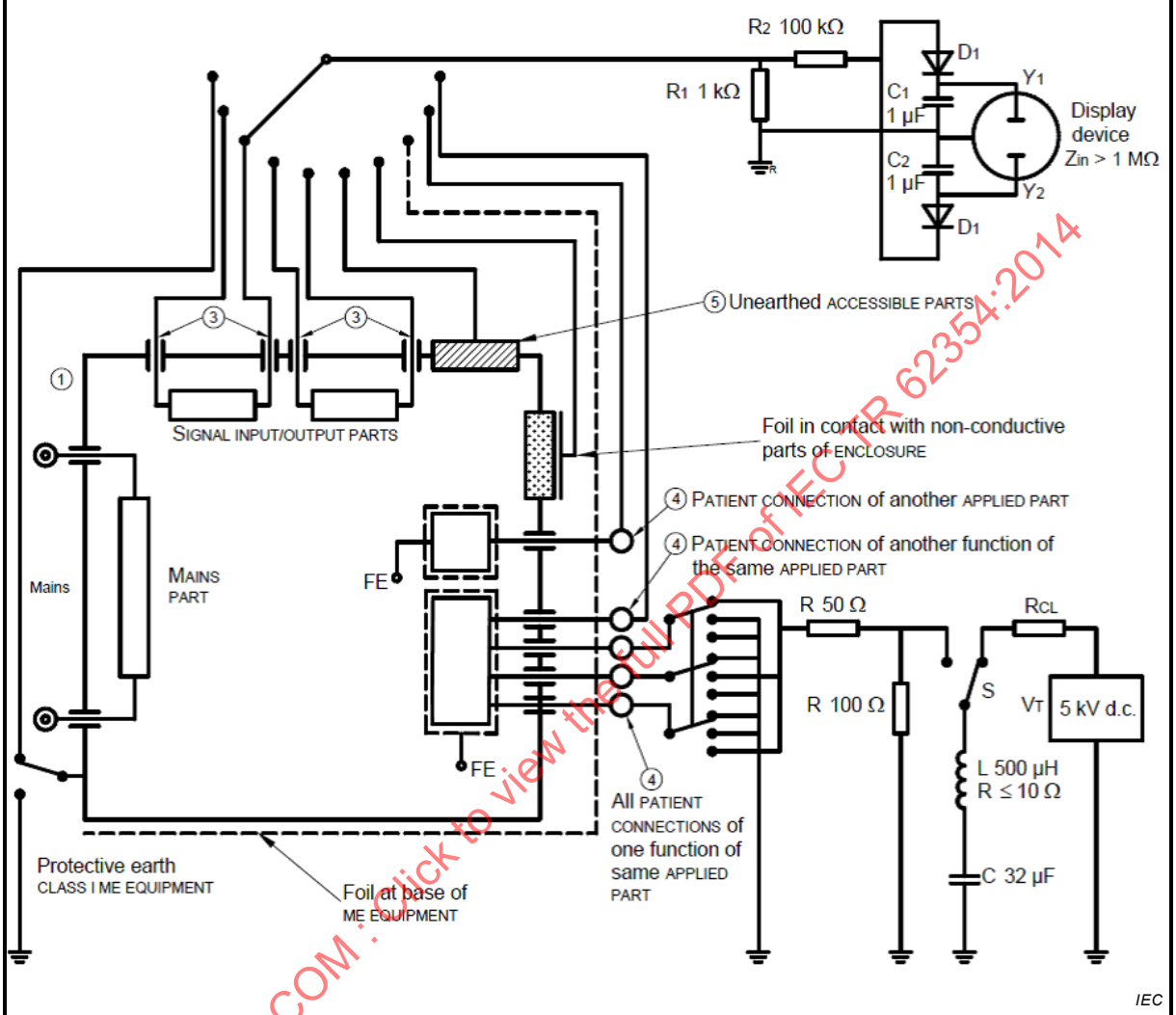

Components

V_T Test voltage

S Switch for applying the test voltage

R_1, R_2 Tolerance at ± 2 %, not less than 2 kV

R_{CL} Current limiting resistor

D_1, D_2 Small signal silicon diodes

Other components tolerance at ± 5 %

Figure 15 – Application of test voltage to individual PATIENT CONNECTIONS (differential mode) for DEFIBRILLATION-PROOF APPLIED PARTS

(IEC 60601-1:2005+AMD1:2012, Figure 10)

IECNORM.COM : Click to view the full PDF of IEC TR 62354:2014

13.4.5 DEFIBRILLATION-PROOF APPLIED PART protection *(continued)*		
Standard(s):	**Subclause(s):**	**13.4.5 DEFIBRILLATION-PROOF APPLIED PART protection**
IEC 60601-1:2005+AMD1:2012	**8.5.5.1**	

b) Safety precautions during the test:

Defibrillators are designed to produce pulses on accessible electrodes. These pulses are potentially lethal. Only properly trained and authorised personnel should perform these tests.

Before carrying out these tests, the ME EQUIPMENT, in particular HIGH VOLTAGE cables and electrodes, should be examined for damage and for anything that may affect the integrity of the insulation such as conductive gel. The test apparatus should be positioned to avoid the possibility of accidental contact by other persons. Defibrillators or similar HIGH VOLTAGE sources should not be left switched on and left unattended. Variable output voltage controls should always be set to the minimum value when not in use.

c) Test sample preparation:

The ME EQUIPMENT is energised unless inspection of the circuits shows that a de-energised state is the worst-case situation.

d) Test conditions:

During each test:

– Connect the PROTECTIVE EARTH CONDUCTOR of CLASS I ME EQUIPMENT to earth. Test CLASS I ME EQUIPMENT that is capable of operation without a SUPPLY MAINS, e.g. having an internal battery, again without its PROTECTIVE EARTH CONNECTION.

– Cover insulating surfaces of APPLIED PARTS with metal foil or immersed the APPLIED PART in a 0,9 % saline solution.

– Remove any external connection to a FUNCTIONAL EARTH TERMINAL.

– Connect non-PROTECTIVELY EARTHED parts to a display device in turn at a point other than where energy is being measured.

IECNORM.COM : Click to view the full PDF of IEC TR 62354:2014

13.4.5 DEFIBRILLATION-PROOF APPLIED PART protection *(continued)*		
Standard(s):	**Subclause(s):**	**13.4.5 DEFIBRILLATION-PROOF APPLIED PART protection**
IEC 60601-1:2005+AMD1:2012	**8.5.5.1**	

e) Test set-up and PROCEDURE:

1) ***Common-mode test:***

Connect the DUT to the test circuit as shown in Figure 14. Connect all the non-PROTECTIVELY EARTHED or functionally earthed PATIENT connections of the DEFIBRILLATION-PROOF APPLIED PART together. Apply the test voltage to all the PATIENT CONNECTIONS of the DEFIBRILLATION-PROOF APPLIED PART to the combined connections. If an APPLIED PART has multiple functions, the test voltage is applied to all the PATIENT CONNECTIONS of one function at a time with the other functions disconnected.

Measure the energy from the following parts in turn:

– The ENCLOSURE, including connectors in PATIENT leads and cables when connected to the ME EQUIPMENT (does not apply when disconnected from the DUT).

– Any SIGNAL INPUT/OUTPUT PART.

– Metal foil with an area at least as large as the base of the ME EQUIPMENT upon which the ME EQUIPMENT is placed.

– PATIENT CONNECTIONS of any other APPLIED PART (whether or not classified as a DEFIBRILLATION-PROOF APPLIED PART).

– Any unused or disconnected connections of the APPLIED PART under test or any function of the same APPLIED PART.

ME EQUIPMENT that is completely BODY-WORN is exempt from this requirement.

2) ***Differential-mode test:***

Connect the DUT to the test circuit as shown in Figure 15 Connect all but one of the PATIENT connections of the DEFIBRILLATION-PROOF APPLIED PART together and then connect that to earth. Apply the test voltage to the remaining PATIENT CONNECTION.

Do not perform the differential-mode test if the APPLIED PART consists of a single PATIENT connection.

Where multiple APPLIED PARTS share a common PATIENT circuit and are not separated by the required CREEPAGE DISTANCE and AIR CLEARANCE, then treat all these APPLIED PARTS as DEFIBRILLATION-PROOF APPLIED PARTS.

After the tests, and following any recovery time stated in the ACCOMPANYING DOCUMENTS, verify that the DUT continues to provide BASIC SAFETY and ESSENTIAL PERFORMANCE.

During the tests:

– Except for PERMANENTLY INSTALLED ME EQUIPMENT, test the ME EQUIPMENT with and without the PROTECTIVE EARTH CONDUCTOR connected.

– Cover insulating surfaces of APPLIED PARTS with metal foil or, where appropriate, immerse the APPLIED PART in a 0,9 % saline solution.

– Any external connection to a FUNCTIONAL EARTH TERMINAL is removed;

– Connect the ME EQUIPMENT to the SUPPLY MAINS and operated it in accordance with the ACCOMPANYING DOCUMENTS.

Measure the peak voltage and repeat each test with test voltage reversed.

IECNORM.COM : Click to view the full PDF of IEC TR 62354:2014

13.4.5 DEFIBRILLATION-PROOF APPLIED PART protection *(continued)*

Standard(s):	Subclause(s):	13.4.5 DEFIBRILLATION-PROOF APPLIED PART protection
IEC 60601-1:2005+AMD1:2012	8.5.5.1	

f) Presentation of the test results:

TABLE: DEFIBRILLATION-PROOF APPLIED PARTS					
Test condition: Figure 14 or Figure 15	ACCESSIBLE PART of measurement	APPLIED PART with test voltage	Test voltage polarity	Voltage measured between Y1 and Y2 mV	Remarks

TABLE: Defibrillation-proof recovery time				
APPLIED PART with test voltage	Test voltage polarity	Recovery time from ACCOMPANYING DOCUMENT s	Measured recovery time s	Remarks

IECNORM.COM : Click to view the full PDF of IEC TR 62354:2014

13.4.6 Energy reduction

Standard(s)	Subclause(s):	13.4.6 Energy reduction
IEC 60601-1:2005+AMD1:2012	8.5.5.2	

a) Equipment needed for the test:

1) Test circuits as shown in Figure 16

2) Means to evaluate d.c. energy delivered to a resistive (non inductive) load

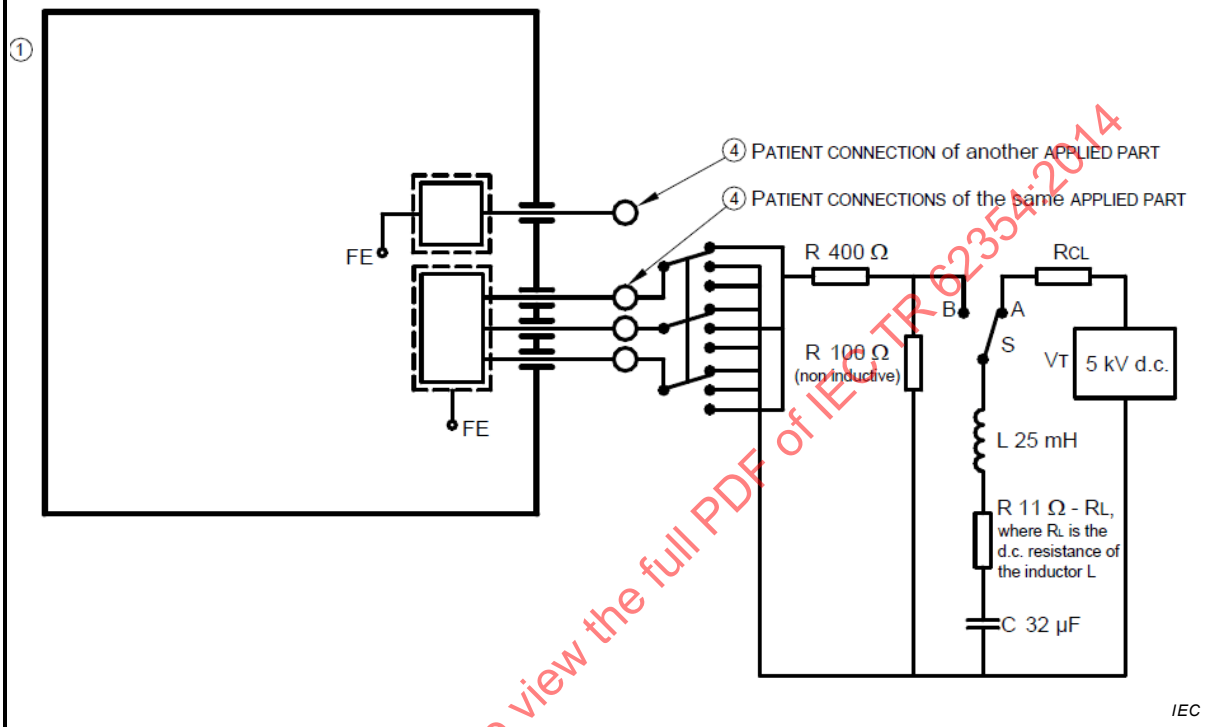

Components

S Switch for applying the test energy

A, B Switch positions

R_{CL} Current limiting resistor

Components toleranced at ± 5 %

Figure 16 – Application of test voltage to test the delivered defibrillation energy (energy reduction test)

(IEC 60601-1:2005+AMD1:2012, Figure 11)

b) Safety precautions during the test:

Defibrillators are designed to produce potentially lethal pulses on accessible electrodes. Only properly trained and authorised personnel should perform these tests.

Before carrying out this test, examine the ME EQUIPMENT, in particular HIGH VOLTAGE cables and electrodes, should be examined for damage and for anything that may affect the integrity of the insulation such as conductive gel. Position the test apparatus to avoid the possibility of accidental contact by other persons. Do not leave defibrillators or similar HIGH VOLTAGE sources switched on and unattended. Always set variable output voltage controls to the minimum value when not in use.

c) Test sample preparation:

Energize the ME EQUIPMENT unless inspection of the circuits shows that a de-energised state is the worst-case situation.

IECNORM.COM : Click to view the full PDF of IEC TR 62354:2014

13.4.6 Energy reduction *(continued)*

Standard(s):	Subclause(s):	13.4.6 ENERGY REDUCTION
IEC 60601-1:2005+A1:2012	8.5.5.2	

d) Test conditions:

Use ACCESSORIES such as cables, electrodes and transducers that are recommended in the instructions for use.

e) Test set-up and PROCEDURE:

1) Connect the APPLIED PART or PATIENT CONNECTION to the test circuit. The parts described in 8.5.5.1 a) are connected to earth (See 13.4.5 above for list of parts).

2) Charge capacitor *C* to 5 kV d.c. with switch S in position A.

3) Discharge capacitor *C* by actuating the switch S to position B, and evaluate the energy E1 delivered to the 100 Ω load. Measure or calculate the energy by any convenient method.

4) Remove the ME EQUIPMENT under test from the test circuit and repeat steps 2) and 3) above, evaluating the energy E2 delivered to the 100 Ω load. Apply the test voltage to each PATIENT CONNECTION or APPLIED PART in turn, with all the remaining PATIENT CONNECTIONS of the same APPLIED part connected to earth (differential mode).

5) Other DEFIBRILLATOR PROOF APPLIED PARTS, if any, are tested separately, in turn.

6) Repeat the test with reverse test voltage.

NOTE Delivered energy can be expressed as:

$$W_d = W_s \times R / (R + R_i)$$

where W_d is the delivered energy in J, W_s is the stored energy in J, R is the subject resistance (i.e. 100 Ω), R_i is the measuring device resistance in Ω.

$W_s = CU^2 / 2$, where C is the capacitance in farads (i.e. 32×10^{-6} F), U is the voltage applied to the capacitor (i.e. 5 kV).

f) Presentation of the test results:

TABLE: Measured/calculated energy

APPLIED PART/connection	Measured/calculated energy (E1)	Measured/calculated energy (E2)	% Reduction

Measured / calculated energy E1: _____ J

Measured / calculated energy E2: _____ J

E1 **is** / **is not** at least 90 % of E2.

IECNORM.COM : Click to view the full PDF of IEC TR 62354:2014

13.4.7 EARTH LEAKAGE CURRENT

Standard(s):	Subclause(s):	13.4.7 EARTH LEAKAGE CURRENT
IEC 60601-1:2005+AMD1:2012	8.7.4.5	

a) Equipment needed for the test:

1) Voltmeter
2) Digital storage oscilloscope with true RMS feature
3) Variable source of AC power supply
4) Measuring device and its frequency characteristics as shown in Figure 17.

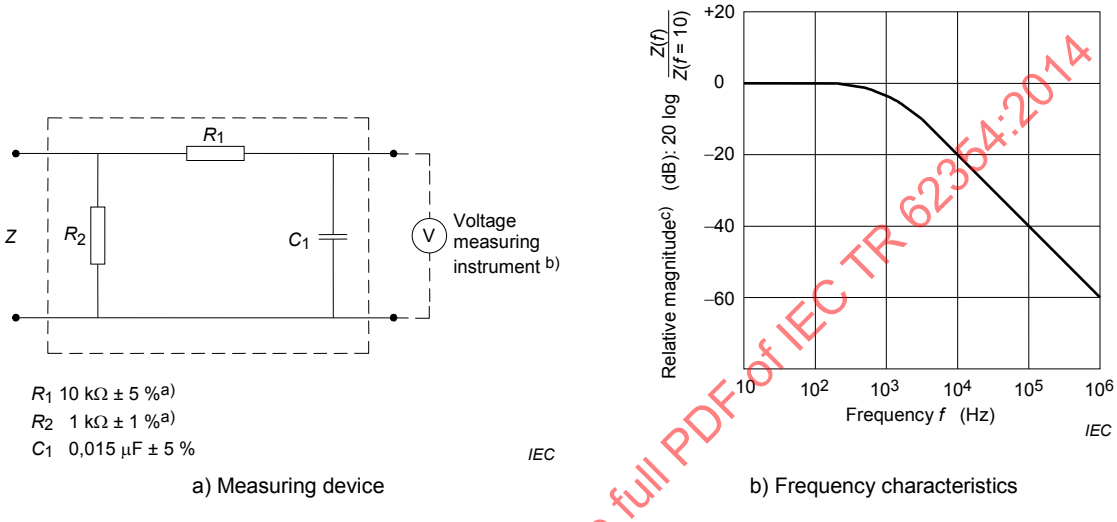

a) Measuring device

b) Frequency characteristics

NOTE The network and voltage measuring instrument above are replaced by the symbol

in the following figures.

a) Non-inductive components
b) Resistance ≥ 1 MΩ and capacitance ≤ 150 pF
c) $Z(f)$ is the transfer impedance of the network, i.e. V_{out}/I_{in}, for a current of frequency f.

Figure 17 – Example of a measuring device and its frequency characteristics
(IEC 60601-1:2005+AMD1:2012, Figure 12)

b) Safety precautions during the test:

Use normal laboratory safety PROCEDURES during this test.

c) Test sample preparation:

Place APPLIED PARTS, including PATIENT cords (when present) on an insulating surface with a dielectric constant of approximately 1 (for example, expanded polystyrene). Position the APPLIED PARTS approximately 200 mm above an earthed metal surface.

Position the measuring supply circuit and the measuring circuit as far as possible away from unscreened power source leads. Avoid placing the ME EQUIPMENT on or near a large earthed metal surface.

If the test results for the APPLIED PARTS can depend upon how those parts are placed on the insulating surface, repeat the test as needed to determine the worst possible positioning.

If an isolating transformer is not used for LEAKAGE CURRENT measurements (e.g. when measuring LEAKAGE CURRENT for very high input power ME EQUIPMENT), connect the reference earth of the measuring circuits to protective earth of the SUPPLY MAINS.

IECNORM.COM : Click to view the full PDF of IEC TR 62354:2014

13.4.7 EARTH LEAKAGE CURRENT *(continued)*

Standard(s):	Subclause(s):	13.4.7 EARTH LEAKAGE CURRENT
IEC 60601-1:2005+A1:2012	8.7.4.5	

d) Test conditions:

ME EQUIPMENT specified for connection to a SUPPLY MAINS is connected to an appropriate power source as shown in Figure 18. For single-phase ME EQUIPMENT, the polarity of the supply is reversible and tests are conducted at both polarities.

Test the ME EQUIPMENT provided with a POWER SUPPLY CORD using this cord.

Test the ME EQUIPMENT provided with an APPLIANCE INLET while connected to the measuring supply circuit via a DETACHABLE POWER SUPPLY CORD having a length of 3 m or a length and type specified by the MANUFACTURER.

Test PERMANENTLY INSTALLED ME EQUIPMENT while connected to the measuring supply circuit by the shortest possible connection.

The measuring device should load the source of LEAKAGE CURRENT or PATIENT AUXILIARY CURRENT with a resistive impedance of approximately 1 kΩ for d.c., a.c. and for composite waveforms with frequencies up to and including 1 MHz.

If significant currents or current components with frequencies exceeding 1 kHz are likely to occur, measure these using other appropriate means such as a 1 kΩ non-inductive resistor and a suitable measuring instrument.

The measuring instrument (voltmeter) is to have an input resistance of at least 1 MΩ and input capacitance of no more than 150 pF. It should indicate the true r.m.s. value of the voltage, being d.c., a.c. or a composite waveform having components with frequencies from 0,1 Hz up to and including 1 MHz, with an indicating error not exceeding ± 5 % of the indicated value.

The scale may indicate the current through the measuring device including automatic evaluation of components with frequencies above 1 kHz.

These requirements may be limited to a frequency range with an upper limit lower than 1 MHz if it can be proven (for example, by the use of an oscilloscope) that frequencies above such an upper limit do not occur in the measured current.

The only SINGLE FAULT CONDITION for the EARTH LEAKAGE CURRENT is the interruption of one supply conductor at a time.

In the case of FIXED ME EQUIPMENT that may have connections to earth through the building structure, the MANUFACTURER should specify a suitable test PROCEDURE and configuration for measurement of EARTH LEAKAGE CURRENT.

Apply the values of the EARTH LEAKAGE CURRENT in any combination of the following conditions:

– At operating temperature following the humidity preconditioning treatment.

– In NORMAL CONDITION and in the SINGLE FAULT CONDITIONS specified.

– With the ME EQUIPMENT energized in stand-by condition and fully operating and with any switch in the MAINS PART in any position.

– With the highest RATED supply frequency.

– With a supply equal to 110 % of the highest RATED MAINS VOLTAGE.

– After any required sterilization PROCEDURE (see IEC 60601-1:2005+AMD1:2012, 11.6.7)

e) Test set-up and PROCEDURE:

If the ME EQUIPMENT has more than one PROTECTIVE EARTH CONDUCTOR (for example one connected to the main ENCLOSURE and one to a separate power supply unit) then the current to be measured is the aggregate current that would flow into the protective earthing system of the installation.

Measure the LEAKAGE CURRENTS that can flow in a FUNCTIONAL EARTH CONDUCTOR in non-PERMANENTLY INSTALLED ME EQUIPMENT.

IECNORM.COM : Click to view the full PDF of IEC TR 62354:2014

13.4.7 EARTH LEAKAGE CURRENT *(continued)*

Standard(s):	Subclause(s):	13.4.7 EARTH LEAKAGE CURRENT
IEC 60601-1:2005+A1:2012	8.7.4.5	

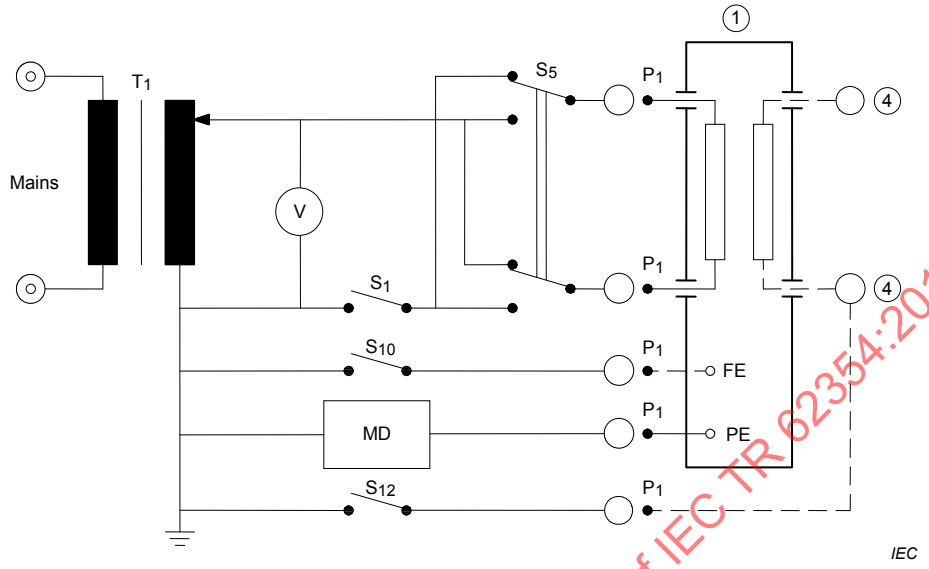

Key

Measure in all possible combinations of positions of S_5, S_{10} and S_{12} with:

S_1 closed (NORMAL CONDITION), and

S_1 open (SINGLE FAULT CONDITION).

Figure 18 – Measuring circuit for the EARTH LEAKAGE CURRENT of CLASS I equipment, with or without APPLIED PARTS

(IEC 60601-1:2005, Figure 13)

IECNORM.COM : Click to view the full PDF of IEC TR 62354:2014

13.4.7 EARTH LEAKAGE CURRENT *(continued)*

Standard(s):	Subclause(s):	13.4.7 EARTH LEAKAGE CURRENT
IEC 60601-1:2005+AMD1:2012	8.7.4.5	

f) Presentation of the test results:

TABLE: LEAKAGE CURRENT				
Type of LEAKAGE CURRENT and test condition (including single faults)	**Supply voltage** V	**Supply frequency** Hz	**Measured max. value** µA	**Remarks**

(Record at least maximum measured value for each test and the specific conditions of the test circuit and equipment).

Abbreviations suitable for the test report:

ER – EARTH LEAKAGE CURRENT

EN – ENCLOSURE LEAKAGE CURRENT

P – PATIENT LEAKAGE CURRENT

PM – PATIENT LEAKAGE CURRENT with mains on the APPLIED PARTS

PSM – PATIENT LEAKAGE CURRENT with mains on SIP/SOPS

PA – PATIENT AUXILIARY CURRENT

MD – Measuring device

TC – TOUCH CURRENT

TPLC – Total PATIENT LEAKAGE CURRENT

A – After humidity conditioning

B – Before humidity conditioning

1 – Switch closed or set to normal polarity

0 – Switch open or set to reversed polarity

NC – NORMAL CONDITION

SFC – SINGLE FAULT CONDITION

IECNORM.COM : Click to view the full PDF of IEC TR 62354:2014

13.4.8 TOUCH CURRENT

Standard(s):	Subclause(s):	13.4.8 TOUCH CURRENT
IEC 60601-1:2005	8.7.4.6	

a) Equipment needed for the test:

See EARTH LEAKAGE CURRENT measurement method [test 13.4.7 a)].

b) Safety precautions during the test:

See EARTH LEAKAGE CURRENT measurement method [test 13.4.7 b)].

c) Test sample preparation:

See EARTH LEAKAGE CURRENT measurement method [test 13.4.7 c)].

d) Test conditions:

See EARTH LEAKAGE CURRENT measurement method [test 13.4.7 d)].

e) Test set-up and PROCEDURE:

1) Measure with MD between earth and each part of the ENCLOSURE(S) that is not PROTECTIVELY EARTHED (see Figure 19).

2) Measure with MD between parts of the ENCLOSURE(S) that are not PROTECTIVELY EARTHED.

3) In the SINGLE FAULT CONDITION of interruption of any one PROTECTIVE EARTH CONDUCTOR, measure with MD between earth and any part of the ENCLOSURE(S) that is normally PROTECTIVELY EARTHED.

   Do not make separate measurements from more than one part that is PROTECTIVELY EARTHED.

4) An INTERNALLY POWERED ME EQUIPMENT is only investigated for TOUCH CURRENT between parts of the ENCLOSURE, not between the ENCLOSURE and earth.

5) If the ME EQUIPMENT has an ENCLOSURE or a part of the ENCLOSURE made of insulating material, apply metal foil of maximum 20 cm × 10 cm in intimate contact with the ENCLOSURE or relevant part of the ENCLOSURE. If the surface of the ENCLOSURE contacted by the PATIENT or OPERATOR is larger than 20 cm × 10 cm, increase the size of the foil to correspond to the area of contact.

   Shift the metal foil, if possible, to determine the highest value of the TOUCH CURRENT. The metal foil should not touch any metal parts of the ENCLOSURE that may be PROTECTIVELY EARTHED. However, metal parts of the ENCLOSURE that are not PROTECTIVELY EARTHED can be covered partly or totally by the metal foil.

   To measure the TOUCH CURRENT in the SINGLE FAULT CONDITION of interruption of a PROTECTIVE EARTH CONDUCTOR, arrange the metal foil to contact parts of the ENCLOSURE that are normally PROTECTIVELY EARTHED.

   The above apply also when measuring the TOUCH CURRENT between two pieces of metal foil placed on different parts of the DUT that may be contacted simultaneously.

6) ME EQUIPMENT with a SIGNAL INPUT/OUTPUT PART is, when required, additionally tested using transformer T_2.

   Set the voltage at the transformer T_2 to 110 % of the MAXIMUM MAINS VOLTAGE. Before applying the external voltage, identify the worst case pin configuration based on testing or circuit analysis.

IECNORM.COM : Click to view the full PDF of IEC TR 62354:2014

13.4.8 TOUCH CURRENT *(continued)*

Standard(s):	Subclause(s):	13.4.8 TOUCH CURRENT
IEC 60601-1:2005	8.7.4.6	

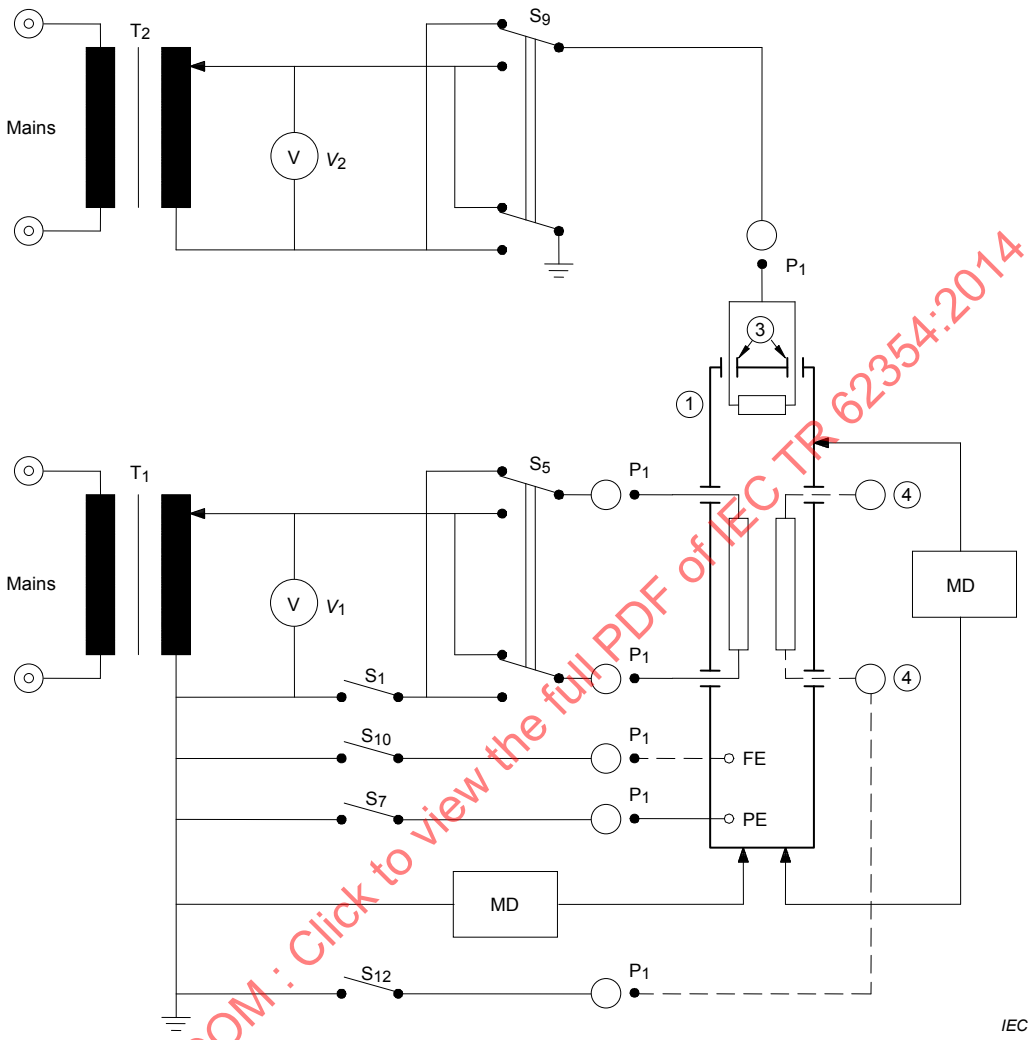

Key

Measure (with S_7 closed if CLASS I equipment) under all possible combinations of positions of S_1, S_5, S_9, S_{10}, and S_{12}.

S_1 open is SINGLE FAULT CONDITION.

CLASS I equipment only:
Measure with S_7 open (SINGLE FAULT CONDITION) and with S_1 closed under all possible combinations of S_5, S_9, S_{10} and S_{12}.

For CLASS II equipment, the PROTECTIVE EARTH CONNECTION and S_7 are not used.

Transformer T_2 is used if required.

Figure 19 – Measuring circuit for the TOUCH CURRENT

(IEC 60601-1:2005+AMD1:2012, Figure 14)

f) Presentation of the test results:

See EARTH LEAKAGE CURRENT [test 13.4.7 f)].

IECNORM.COM : Click to view the full PDF of IEC TR 62354:2014

13.4.9 PATIENT LEAKAGE CURRENT

Standard(s):	Subclause(s):	13.4.9 PATIENT LEAKAGE CURRENT
IEC 60601-1:2005+AMD1:2012	8.7.4.7, 7.8.4.9	

a) Equipment needed for the test:

See EARTH LEAKAGE CURRENT measurement method [test 13.4.7 a)].

b) Safety precautions during the test:

See EARTH LEAKAGE CURRENT measurement method [test 13.4.7 b)].

c) Test sample preparation:

See EARTH LEAKAGE CURRENT measurement method [test 13.4.7 c)].

d) Test conditions:

See EARTH LEAKAGE CURRENT measurement method [test 13.4.7 d)].

e) Test set-up and PROCEDURE:

1) Place an ENCLOSURE, other than an APPLIED PART, made of insulating material in any position of NORMAL USE upon a flat metal surface that is connected to earth with dimensions at least equal to the plane-projection of the ENCLOSURE.

2) Use metal foil to test an APPLIED PART consisting of a surface made of insulating material. Alternatively, immerse the APPLIED PART in a 0,9 % saline solution.

   If the surface of the APPLIED PART contacted by the PATIENT is larger than 20 cm × 10 cm, increase the size of the foil to correspond to the area of contact.

   Treat this metal foil or saline solution as the only PATIENT CONNECTION for the APPLIED PART.

3) If the PATIENT CONNECTION is formed by a fluid which contacts the PATIENT, replace the fluid with a 0,9 % saline solution. Place an electrode in the saline solution. Treat this electrode as the PATIENT CONNECTION for the APPLIED PART.

4) Measure the PATIENT LEAKAGE CURRENT (see Figure 20):

   – for TYPE B APPLIED PARTS from all PATIENT CONNECTIONS connected directly together, and for TYPE BF APPLIED PARTS, from and to all PATIENT CONNECTIONS of a single function, either connected directly together or loaded as in NORMAL USE;

   – for TYPE CF APPLIED PARTS, from and to every PATIENT CONNECTION in turn.

   If the instructions for use specifies alternatives for a detachable part of the APPLIED PART (for example, PATIENT leads and electrodes), measure the PATIENT LEAKAGE CURRENT with the least favourable specified detachable part.

5) Measure the total PATIENT LEAKAGE CURRENT from and to all PATIENT CONNECTIONS of all APPLIED PARTS of the same type (TYPE B APPLIED PARTS, TYPE BF APPLIED PARTS or TYPE CF APPLIED PARTS) connected together (see Figure 21).

   NOTE Measurement of TOTAL PATIENT LEAKAGE CURRENT of TYPE B APPLIED PARTS is only necessary if there are two or more PATIENT CONNECTIONS that belong to different functions and that are not electrically connected directly together.

   If necessary, disconnect a functional earth before conducting this test.

IECNORM.COM : Click to view the full PDF of IEC TR 62354:2014

13.4.9 PATIENT LEAKAGE CURRENT *(continued)*

Standard(s):	Subclause(s):	13.4.9 PATIENT LEAKAGE CURRENT
IEC 60601-1:2005+AMD1:2012	8.7.4.7, 8.7.4.9	

6) If loading of the PATIENT CONNECTIONS of the APPLIED PART is specified by the MANUFACTURER, connect the MD to each PATIENT CONNECTION in turn with the load in place.

7) ME EQUIPMENT with multiple PATIENT CONNECTIONS is investigated to ensure that the PATIENT LEAKAGE CURRENT and the PATIENT AUXILIARY CURRENT do not exceed the allowable values for NORMAL CONDITION while one or more PATIENT CONNECTIONS are:

– disconnected from the PATIENT; and

– disconnected from the PATIENT and earthed.

Testing is performed if an examination of the ME EQUIPMENT circuit indicates that the PATIENT LEAKAGE CURRENT or the PATIENT AUXILIARY CURRENT can increase to excessive levels under the above conditions. Limit the actual measurements to a representative number of combinations.

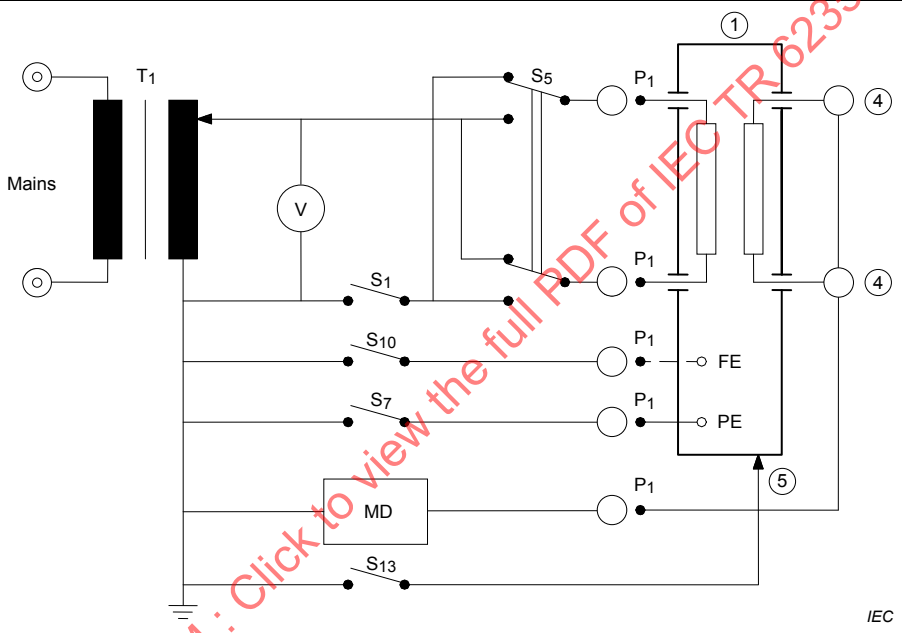

Key

Measure (with S_7 closed if CLASS I ME EQUIPMENT) under all possible combinations of positions of S_1, S_5, S_{10} and S_{13}.

S_1 open is SINGLE FAULT CONDITION.

CLASS I ME EQUIPMENT only:

Measure with S_7 open (SINGLE FAULT CONDITION) and with S_1 closed under all possible combinations of S_5, S_{10} and S_{13}.

For CLASS II ME EQUIPMENT, the PROTECTIVE EARTH CONNECTION and S_7 are not used.

Figure 20 – Measuring circuit for the PATIENT LEAKAGE CURRENT from the PATIENT CONNECTION to earth

(IEC 60601-1:2005+AMD1:2012, Figure 15)

IECNORM.COM : Click to view the full PDF of IEC TR 62354:2014

13.4.9 PATIENT LEAKAGE CURRENT *(continued)*

Standard(s):	Subclause(s):	13.4.9 PATIENT LEAKAGE CURRENT
IEC 60601-1:2005+AMD1:2012	8.7.4.7	

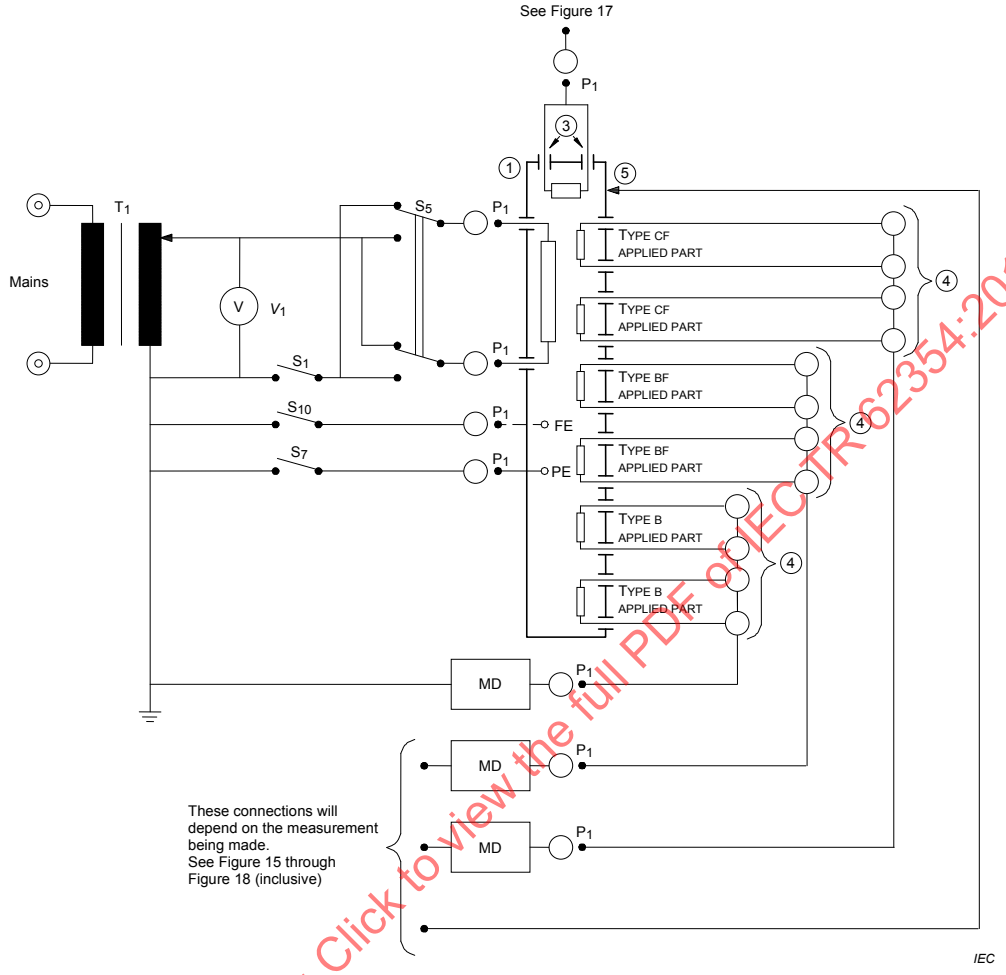

Key

For the position of S_1, S_5, S_7 and S_{10}, see Figure 15, Figure 16, Figure 17 or Figure 18 in IEC 60601-1:2005.

Figure 21 – Measuring circuit for the total PATIENT LEAKAGE CURRENT with all PATIENT CONNECTIONS of all APPLIED PARTS of the same type (TYPE B APPLIED PARTS, TYPE BF APPLIED PARTS or TYPE CF APPLIED PARTS) connected together

(IEC 60601-1:2005+AMD1:2012, Figure 20)

f) Presentation of the test results:

See EARTH LEAKAGE CURRENT measurement method [test 13.4.7 f)].

IECNORM.COM : Click to view the full PDF of IEC TR 62354:2014

13.4.10 PATIENT LEAKAGE CURRENT with mains on F-TYPE APPLIED PART

Standard(s): IEC 60601-1:2005	Subclause(s): 8.7.4.7 b)	13.4.10 PATIENT LEAKAGE CURRENT with mains on F-TYPE APPLIED PART

a) Equipment needed for the test:

See EARTH LEAKAGE CURRENT measurement method [test 13.4.7 a)].

b) Safety precautions during the test:

See EARTH LEAKAGE CURRENT measurement method [test 13.4.7 b)].

c) Test sample preparation:

See EARTH LEAKAGE CURRENT measurement method [test 13.4.7 c)].

d) Test conditions:

See EARTH LEAKAGE CURRENT measurement method [test 13.4.7 d)].

SINGLE FAULT CONDITION: 110 % of MAXIMUM MAINS VOLTAGE on F-TYPE APPLIED PART

e) Test set-up and PROCEDURE:

1) Test ME EQUIPMENT WITH AN F-TYPE APPLIED PART with mains on the APPLIED PART (see Figure 22):

   – Connect SIGNAL INPUT/OUTPUT PARTS to earth, if not already permanently earthed in the ME EQUIPMENT.

   – Set the voltage at the transformer T_2 to 110 % of the MAXIMUM MAINS VOLTAGE.

   For this measurement, connect non-PROTECTIVELY EARTHED metal ACCESSIBLE PARTS including PATIENT CONECTIONS of other APPLIED PARTS (if present) to earth.

2) ME EQUIPMENT with a PATIENT CONNECTION of a TYPE B APPLIED PART that is not PROTECTIVELY EARTHED or a TYPE BF APPLIED PART and with metal ACCESSIBLE PARTS that are not PROTECTIVELY EARTHED is additionally tested using the measuring circuit in Figure 23.

3) Set the voltage at the transformer T_2 to 110 % of the MAXIMUM MAINS VOLTAGE.

This test need not be conducted if it can be demonstrated that there is adequate separation of the parts involved.

IECNORM.COM : Click to view the full PDF of IEC TR 62354:2014

13.4.10 PATIENT LEAKAGE CURRENT with mains on F-TYPE APPLIED PART *(continued)*

Standard(s):	Subclause(s):	13.4.10 PATIENT LEAKAGE CURRENT with mains on F-TYPE APPLIED PART
IEC 60601-1:2005	8.7.4.7 b)	

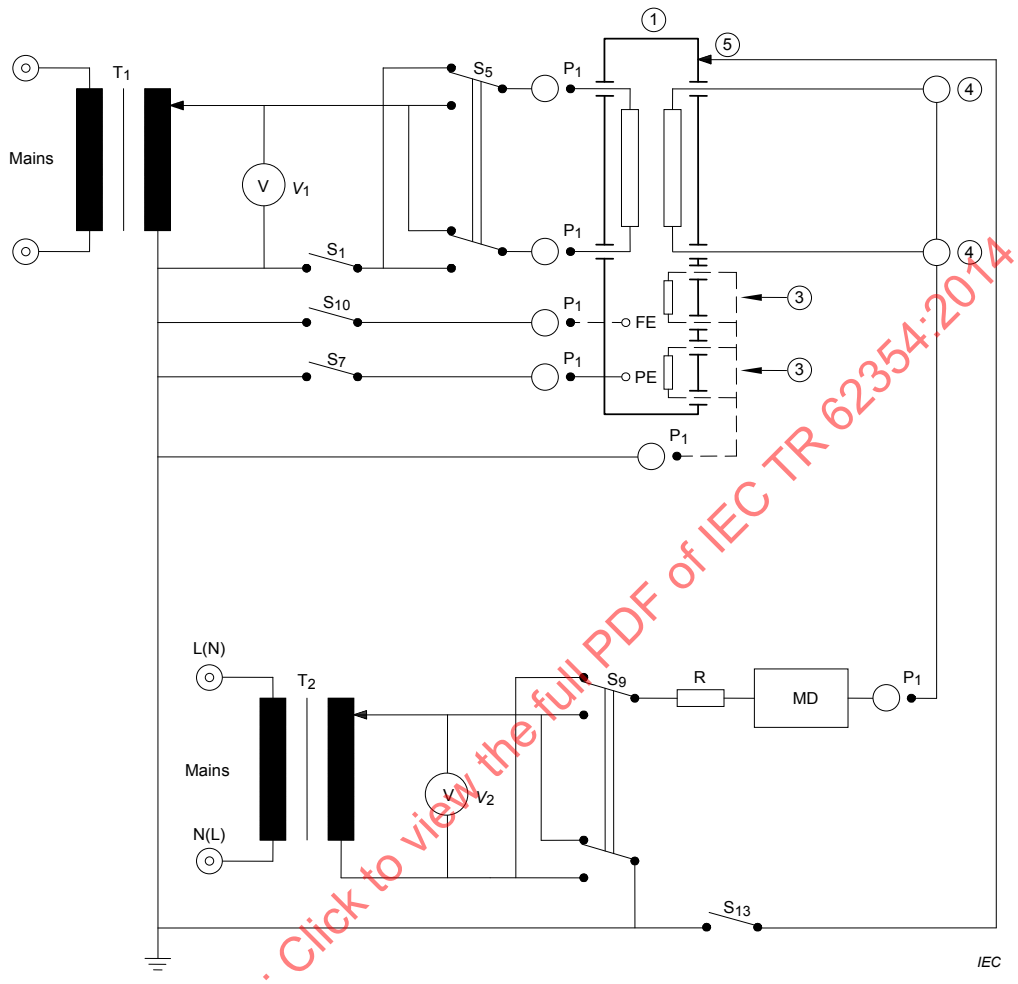

Key

Measure (with S_7 closed, if CLASS I ME EQUIPMENT) WITH S_1 closed under all possible combinations of positions of S_5, S_9, S_{10} and S_{13}.

For CLASS II ME EQUIPMENT, the PROTECTIVE EARTH CONNECTION and S_5 are not used.

Figure 22 – Measuring circuit for the PATIENT LEAKAGE CURRENT via the PATIENT CONNECTION(S) of an F-TYPE APPLIED PART to earth caused by an external voltage on the PATIENT CONNECTION(S)

(IEC 60601-1:2005+AMD1:2012, Figure 16)

IECNORM.COM : Click to view the full PDF of IEC TR 62354:2014

13.4.10 PATIENT LEAKAGE CURRENT with mains on F-TYPE APPLIED PART *(continued)*

Standard(s): IEC 60601-1:2005	Subclause(s): 8.7.4.7 b)	13.4.10 PATIENT LEAKAGE CURRENT with mains on F-TYPE APPLIED PART

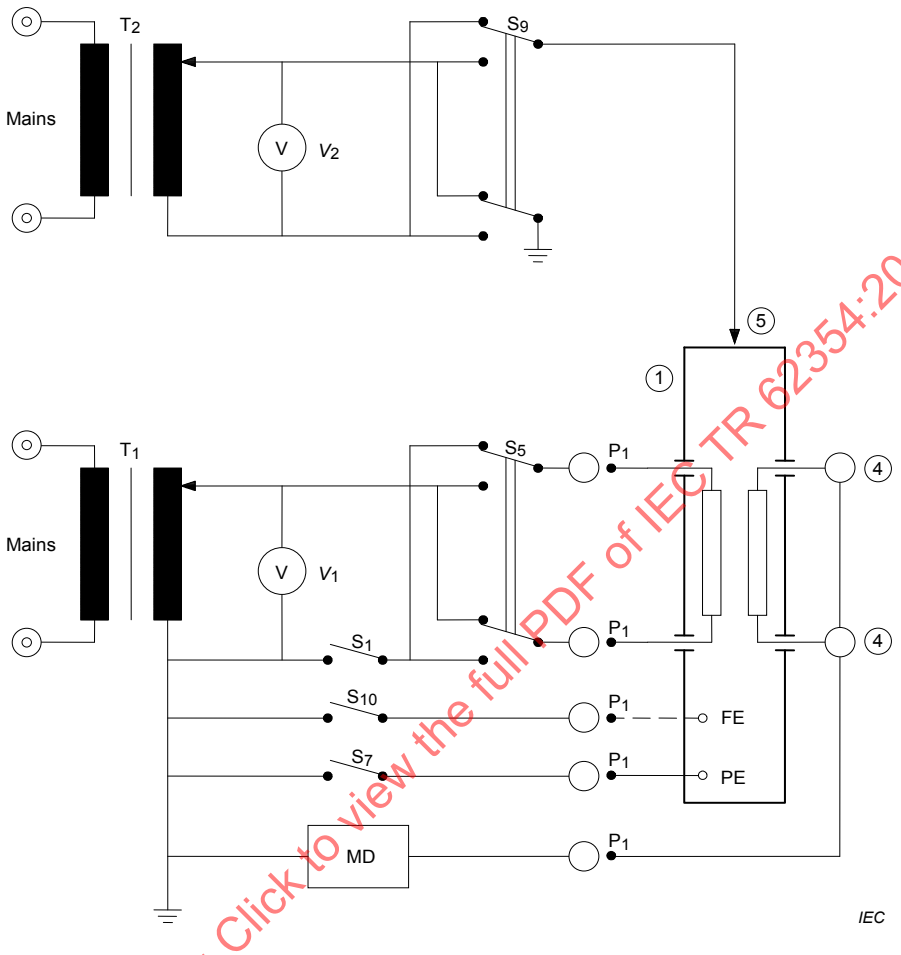

Key

Measure with S_1 closed (and with S_7 closed, if CLASS I ME EQUIPMENT) under all possible combinations of positions of S_5, S_9 and S_{10}.

For CLASS II ME EQUIPMENT, the PROTECTIVE EARTH CONNECTION and S_7 are not used.

Figure 23 – Measuring circuit for the PATIENT LEAKAGE CURRENT from PATIENT CONNECTION(S) to earth caused by an external voltage on a metal ACCESSIBLE PART that is not PROTECTIVELY EARTHED

(IEC 60601-1:2005+AMD1:2012, Figure 18)

f) Presentation of the test results:

See EARTH LEAKAGE CURRENT measurement method [test 13.4.7 f)].

IECNORM.COM : Click to view the full PDF of IEC TR 62354:2014

13.4.11 PATIENT LEAKAGE CURRENT with mains on SIP/SOP

Standard(s): IEC 60601-1:2005	Subclause(s): 8.7.4.7 c)	13.4.11 PATIENT LEAKAGE CURRENT with mains on SIP/SOP
a) Equipment needed for the test: See EARTH LEAKAGE CURRENT measurement method [test 13.4.7 a)].		
b) Safety precautions during the test: See EARTH LEAKAGE CURRENT measurement method [test 13.4.7 b)].		
c) Test sample preparation: See EARTH LEAKAGE CURRENT measurement method [(test 13.4.7 c)].		
d) Test conditions: See EARTH LEAKAGE CURRENT measurement method [test 13.4.7 d)]. SINGLE FAULT CONDITION: 110 % of MAXIMUM MAINS VOLTAGE on a SIGNAL INPUT/OUTPUT PART		
e) Test set-up and PROCEDURE: When ACCOMPANYING DOCUMENTS place no restrictions on other equipment which may be connected to the DUT (ME EQUIPMENT), and the DUT has SIP/SOPs, test the device with the MAXIMUM MAINS VOLTAGE on the SIP/SOP (see Figure 24). Set the voltage at the transformer T_2 to 110 % of the MAXIMUM MAINS VOLTAGE. Before applying the external voltage, identify the worst case pin configuration based on testing or circuit analysis.		

IECNORM.COM : Click to view the full PDF of IEC TR 62354:2014

13.4.11 PATIENT LEAKAGE CURRENT with mains on SIP/SOP *(continued)*

Standard(s): IEC 60601-1:2005	Subclause(s): 8.7.4.7 c)	13.4.11 PATIENT LEAKAGE CURRENT with mains on SIP/SOP

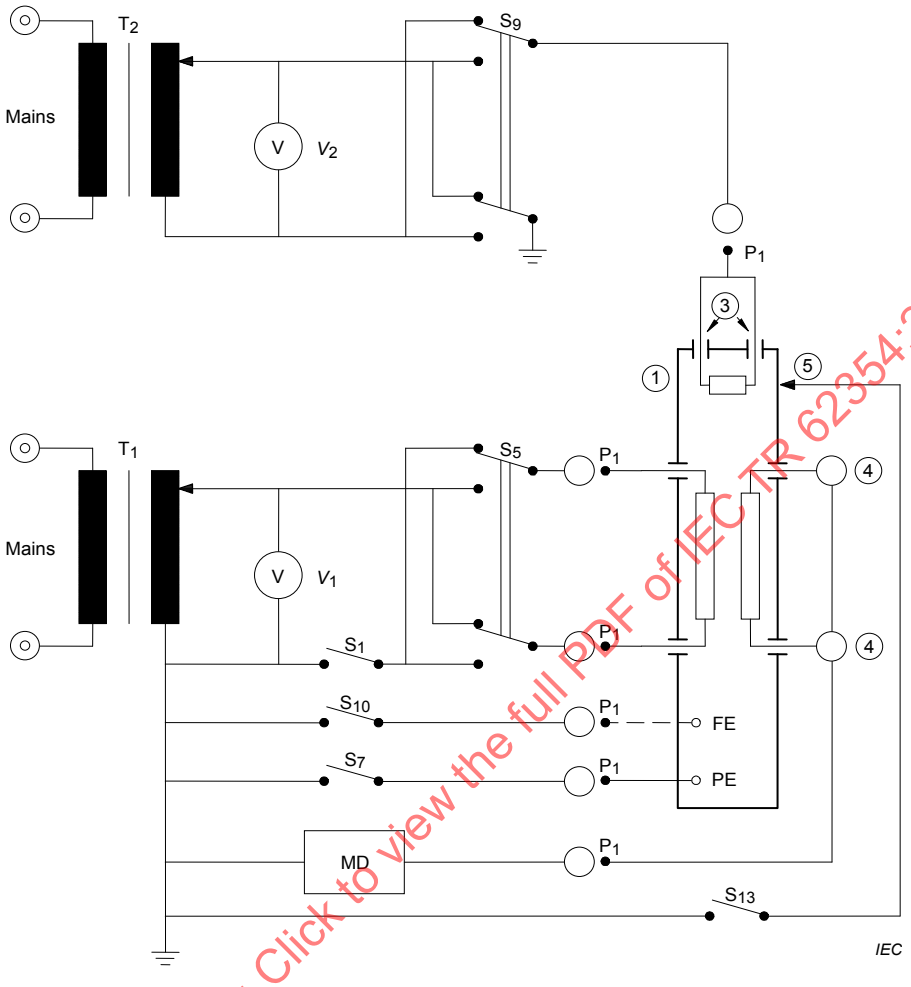

Key

Measure (with S_7 closed, if CLASS I ME EQUIPMENT) under all possible combinations of positions of S_1, S_5, S_9, S_{10} and S_{13} (S_1 open is SINGLE FAULT CONDITION).

CLASS I ME EQUIPMENT only:

Measure with S_7 open (SINGLE FAULT CONDITION) and with S_1 closed under all possible combinations of S_5, S_9, S_{10} and S_{13}.

For CLASS II ME EQUIPMENT, the PROTECTIVE EARTH CONNECTION and S_7 are not used.

Figure 24 – Measuring circuit for the PATIENT LEAKAGE CURRENT from PATIENT CONNECTION(S) to earth caused by an external voltage on a SIGNAL INPUT/OUTPUT PART

(IEC 60601-1:2005+AMD1:2012, Figure 17)

f) Presentation of the test results:

See EARTH LEAKAGE CURRENT measurement method [test 13.4.7 f)].

IECNORM.COM : Click to view the full PDF of IEC TR 62354:2014

13.4.12 PATIENT AUXILIARY CURRENT

Standard(s): IEC 60601-1:2005	Subclause(s): 8.7.4.8	13.4.12 PATIENT AUXILIARY CURRENT

a) Equipment needed for the test:

See EARTH LEAKAGE CURRENT measurement method [test 13.4.7 a)].

b) Safety precautions during the test:

See EARTH LEAKAGE CURRENT measurement method [test 13.4.7 b)].

c) Test sample preparation:

See EARTH LEAKAGE CURRENT measurement method [test 13.4.7 c)].

d) Test conditions:

See EARTH LEAKAGE CURRENT measurement method test 13.4.7 d)].

e) Test set-up and PROCEDURE:

Test ME EQUIPMENT with an APPLIED PART according to Figure 25, using an appropriate measuring supply circuit unless the ME EQUIPMENT has only a single PATIENT CONNECTION.

Measure the PATIENT AUXILIARY CURRENT between any single PATIENT CONNECTION and all other PATIENT CONNECTIONS, either connected directly together or loaded as specified by the MANUFACTURER.

Measure PATIENT AUXILIARY CURRENT as NORMAL CONDITION values while one or more PATIENT CONNECTIONS are:

– disconnected from the PATIENT; and

– disconnected from the PATIENT and earthed.

Only perform this test if examination of the DUT circuit indicates that the PATIENT AUXILIARY CURRENT can increase to excessive levels under the above conditions. Limit actual measurements to a representative number of combinations.

IECNORM.COM : Click to view the full PDF of IEC TR 62354:2014

13.4.12 PATIENT AUXILIARY CURRENT *(continued)*

Standard(s):	Subclause(s):	13.4.12 PATIENT AUXILIARY CURRENT
IEC 60601-1:2005	8.7.4.8	

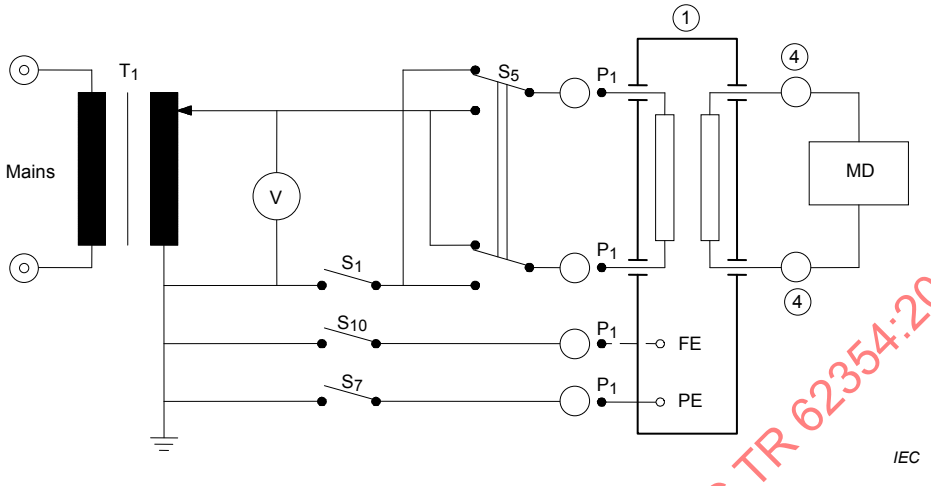

Key

Measure (with S_7 closed if CLASS I ME EQUIPMENT) under all possible combinations of positions of S_1, S_5, and S_{10}.

S_1 open is SINGLE FAULT CONDITION.

CLASS I ME EQUIPMENT only:

Measure with S_7 open (SINGLE FAULT CONDITION) and with S_1 closed under all possible combinations of positions of S_5, and S_{10}.

For CLASS II ME EQUIPMENT, the PROTECTIVE EARTH CONNECTION and S_7 are not used.

Figure 25 – Measuring circuit for the PATIENT AUXILIARY CURRENT
(IEC 60601-1:2005+AMD1:2012, Figure 19)

f) Presentation of the test results:

See EARTH LEAKAGE CURRENT measurement method [test 13.4.7 f)].

IECNORM.COM : Click to view the full PDF of IEC TR 62354:2014

13.4.13 WORKING VOLTAGE measurement

Standard(s): IEC 60601-1:2005	Subclause(s): 8.5.4, 8.10.4.1	13.4.13 WORKING VOLTAGE measurement

a) Equipment needed for the test:

1) Digital storage scope
2) True r.m.s voltmeter
3) Variable power source
4) Oscilloscope

b) Safety precautions during the test:

Use normal laboratory safety PROCEDURES during this test.

c) Test sample preparation:

One representative test sample.

Make the relevant supply circuit available (see Annex D).

d) Test conditions:

Treat unearthed accessible conductive parts as if they are earthed.

If a transformer winding or other part is floating (it is not connected to a circuit which establishes its potential relative to earth), assume that winding or other part is earthed at the point where the highest WORKING VOLTAGE is obtained.

For insulation between two transformer windings, use the highest voltage between any two points in the two windings, taking into account external voltages to which the windings are connected.

For insulation between a transformer winding and another part, use the highest voltage between any point on the winding and the other part.

Where DOUBLE INSULATION is used, determine the WORKING VOLTAGE across the BASIC INSULATION by imagining a short circuit across the SUPPLEMENTARY INSULATION, and vice versa. For DOUBLE INSULATION between transformer windings, assume the short circuit takes place at the point where the highest WORKING VOLTAGE is produced in the other insulation.

When the WORKING VOLTAGE is determined by measurement, the input power supplied to the DUT should be at the RATED voltage or the voltage within the RATED voltage range which results in the highest measured value.

Assume that the WORKING VOLTAGE between any point in the primary circuit and earth, and between any point in the primary circuit and a SECONDARY CIRCUIT, is the greater of the following:

– the RATED voltage or the upper voltage of the RATED voltage range; and
– the measured voltage.

If starting pulses are used to ignite discharge lamps, the PEAK WORKING VOLTAGE is the peak value of the pulses with the lamp connected but before the lamp ignites. The r.m.s. WORKING VOLTAGE to determine minimum CREEPAGE DISTANCES is the voltage measured after the ignition of the lamp.

Use the measured r.m.s. value for all waveforms.

Do not consider non-repetitive transients (due, for example, to atmospheric disturbances).

NOTE The resultant r.m.s. value of a waveform having an a.c. r.m.s. voltage "*A*" and a d.c. offset voltage "*B*" is given by the following formula:

$$\text{r.m.s. value} = (A_2 + B_2)\ 1/2$$

IECNORM.COM : Click to view the full PDF of IEC TR 62354:2014

13.4.13 WORKING VOLTAGE measurement *(continued)*

Standard(s):	Subclause(s):	13.4.13 WORKING VOLTAGE measurement
IEC 60601-1:2005	8.5.4, 8.10.4.1	

Because the minimum AIR CLEARANCES and electric strength test voltages depend on PEAK WORKING VOLTAGES, when determining these voltages, use the measured peak value for all waveforms including the peak value of any ripple (up to 10 %) on a d.c. voltage.

Determine the WORKING VOLTAGE for each MEANS OF PROTECTION as follows.

– For d.c. voltages with superimposed ripple, the WORKING VOLTAGE is the average value (if the peak-to-peak ripple does not exceed 10 % of the average value) or the peak voltage (if the peak-to-peak ripple exceeds 10 % of the average value.)

– The WORKING VOLTAGE for each MEANS OF PROTECTION forming DOUBLE INSULATION is the voltage to which the DOUBLE INSULATION as a whole is subjected.

– For WORKING VOLTAGE involving a PATIENT CONNECTION not connected to earth, the situation in which the PATIENT is earthed (intentionally or accidentally) is regarded as a NORMAL CONDITION.

– The WORKING VOLTAGE between the PATIENT CONNECTION(S) of an F-TYPE APPLIED PART and the ENCLOSURE is the highest voltage appearing across the insulation in NORMAL USE including earthing of any part of the APPLIED PART.

– For DEFIBRILLATION-PROOF APPLIED PARTS, determine the WORKING VOLTAGE without regard to the possible presence of defibrillation voltages.

– In the case of motors provided with capacitors where a resonance voltage may occur between the point where a winding and a capacitor are connected together on the one hand and any terminal for external conductors on the other hand, the WORKING VOLTAGE is equal to the resonance voltage.

e) Test set-up and PROCEDURE:

1) Operate the DUT at RATED voltage or at the upper limit of the RATED voltage range.

2) Connect a voltmeter and/or oscilloscope at the indicated location and measure and record the maximum voltage in the circuit.

f) Presentation of the test results:

The DUT is connected to _____ **V a.c.**, _____ **Hz** or **d.c.** and operated normally. WORKING VOLTAGES between the following points are recorded.

TABLE: WORKING VOLTAGE			
Measuring points		Measured voltage	
From	To	V, r.m.s.	V, peak

IECNORM.COM : Click to view the full PDF of IEC TR 62354:2014

13.4.14 Sound pressure level measurements

Standard(s): IEC 60601-1:2005+AMD1:2012	Subclause(s): 9.6.2.1	13.4.14 Sound pressure level measurement

a) Equipment needed for the test:

1) Semi-reverberant test room
2) Sound level meter conforming to IEC 61672-1 and IEC 61672-2, A-weighted, 60 dB – 150 dB range

b) Safety precautions during the test:

Use normal laboratory safety PROCEDURES during this test.

c) Test sample preparation:

One representative test sample.

d) Test conditions:

Ensure that any protective means described in ACCOMPANYING DOCUMENTS is in place during sound measurements.

Operate the DUT under worst-case NORMAL CONDITION.

e) Test set-up and PROCEDURE:

1) Operate the DUT at RATED voltage or at the upper limit of the RATED voltage range.
2) Position the DUT in the semi-reverberant test room, with a hard reflecting floor, at a position at least 3 m from any wall or any other object within the room. With all covers in place and in the closed position, operate the DUT under the maximum normal load conditions. When sound measurements in a test room are not feasible, measurements may be done in situ (e.g. for a large permanently installed ME EQUIPMENT).
3) During these operating modes, record the sound pressure measurements, above background, at both the OPERATOR'S normal position, relative to the DUT, and at a minimum distance of the PATIENT from any position of the DUT.

f) Presentation of the test results:

Referenced background sound pressure measurement = _____ dBA

TABLE: Maximum sound pressure

Operating mode	Maximum sound measured from OPERATOR'S normal position dBA	Maximum sound measured 1 m from any position of DUT dBA

IECNORM.COM : Click to view the full PDF of IEC TR 62354:2014

13.4.15 Hydrostatic pressure

Standard(s):	Subclause:	13.4.15 Hydrostatic pressure
IEC 60601-1:2005	9.7.5	

a) Equipment needed for the test:

1) Hydraulic pressure pump.
2) Calibrated hydraulic gauge (Pa)
3) Necessary hydraulic fluid

If unmarked pressure vessels and pipes cannot be hydraulically tested, substitute pneumatic pressure equipment and pneumatic media.

b) Safety precautions during the test:

Use normal laboratory safety PROCEDURES during this test. This test places parts under pneumatic pressure. Ensure that proper guards are in place to protect the OPERATOR from any possible burst.

c) Test sample preparation:

Adapt the pressure pump and gauge to the vessel to be tested.

d) Test conditions:

Perform this test if the vessel is subjected to a hydraulic pressure multiplied by volume greater than 200 kPa · l and to a pneumatic pressure greater than 50 kPa.

e) Test set-up and PROCEDURE:

Gradually raise the vessel's HYDRAULIC TEST PRESSURE to the MAXIMUM PERMISSIBLE WORKING PRESSURE multiplied by a factor obtained from the Figure 26, and maintain that pressure for 1 min.

If unmarked pressure vessels or parts cannot be hydraulically tested, verify integrity by other suitable tests, e.g. pneumatic using suitable media at the same test pressure as for the hydraulic test.

Leaks at gaskets are considered to be a failure if they occur at a pressure less than 40 % of the required test pressure or less than the MAXIMUM PERMISSIBLE WORKING PRESSURE, whichever is greater.

Leakage is not allowed for pressure vessels intended for toxic, flammable or other dangerous substances.

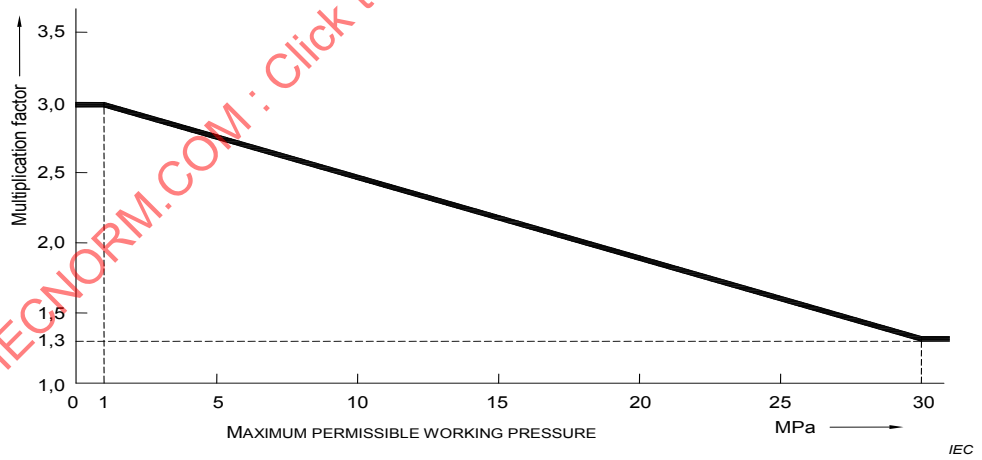

Figure 26 – Ratio between hydraulic test pressure and maximum permissible working pressure

(IEC 60601-1:2005, Figure 32)

IECNORM.COM : Click to view the full PDF of IEC TR 62354:2014

13.4.15 Hydrostatic pressure *(continued)*

Standard(s):	Subclause:	13.4.15 Hydrostatic pressure
IEC 60601-1:2005	9.7.5	

f) Presentation of the test results:

TABLE: Hydrostatic pressure							
Description of vessel or part tested	Hydraulic or pneumatic test H/P	MAXIMUM PERMISSIBLE WORKING PRESSURE	Volume of vessel or part l	Multiplication factor	Calculated test pressure	40 % of calculated test pressure	Remark

The DUT **did not burst/burst**.

There **was/was no** permanent deformation of the polymeric parts of the system.

The DUT **did not leak/leaked**.

IECNORM.COM : Click to view the full PDF of IEC TR 62354:2014

13.4.16 X-radiation (ionizing radiation) measurement

Standard(s): IEC 60601-1:2005+AMD1:2012	Subclause(s): 10.1	13.4.16 X- radiation (ionizing radiation) measurement

a) Equipment needed for the test:

1) Integrated radiation meter suitable for the energy of the emitted radiation or a radiation monitor of the ionizing chamber type with an effective area of 10 cm².

b) Safety precautions during the test:

Special safety PROCEDURES for working in an X-ray environment.

c) Test sample preparation:

One representative test sample.

This test applies to ME EQUIPMENT not intended to produce X-radiation for diagnostic or therapeutic purposes that uses vacuum tubes excited by voltages exceeding 5 kV.

d) Test conditions:

Ensure that any protective means described in the ACCOMPANYING DOCUMENTS are in place during X-radiation measurement.

Operate the DUT under worst-case NORMAL CONDITION

The ENCLOSURE is complete except for OPERATOR removable parts that were not interlocked.

Adjust all OPERATOR and servicing controls for maximum X-radiation without impairing performance.

e) Test set-up and PROCEDURE:

1) Operate the DUT at the most unfavourable RATED MAINS VOLTAGE.

2) Using a radiation meter (the detector having an entry window with an area of approximately 10 cm²), make the X-radiation measurements (1 h averaged over any area of 10 cm^2 of which no linear dimension exceeds 5 cm) at a distance of 5 cm from any surface to which OPERATORS other than SERVICE PERSONNEL:

– can gain access without the use of a TOOL; or

– are deliberately provided with the means of access; or

– are instructed to enter regardless of whether or not a TOOL is needed to gain access.

f) Presentation of the test results:

The maximum X-radiation **was/was not** less than 5 µGy/h adjusted for the level of background radiation.

The actual maximum X-radiation was _____ µGy/h.

TABLE: X-radiation

Part under test	Test condition	Measured radiation µGy/h	Remarks

IECNORM.COM : Click to view the full PDF of IEC TR 62354:2014

13.4.17 Normal heating

Standard(s): IEC 60601-1:2005	Subclause(s): 11.1	13.4.17 Normal heating

a) Equipment needed for the test:

1) Temperature recorder
2) No. 30 AWG welded thermocouples compatible with the temperature recorder
3) Voltmeter
4) A dull black test corner with linear dimensions at least 115 % of the linear dimensions of the DUT
5) Adjustable regulated a.c. supply or other similar voltage and frequency source depending on the input RATING of equipment
6) Load resistors and/or optional ACCESSORIES
7) Ohmmeter
8) Material for fixing thermocouples (i.e. Loctite®[5] 416, 417; tape)
9) Watch or any means to measure time
10) Any means to verify frequency

b) Safety precautions during the test:

Suitable fire extinguisher

Use normal laboratory safety PROCEDURES during this test.

When connecting thermocouples and conducting the test, be careful when placing parts due to hazardous voltages. Also, consider the effects of voltage and frequency on the measurement device in regards to thermocouple placement.

c) Test sample preparation:

One representative sample of the DUT and all optional ACCESSORIES and PATIENT APPLIED PARTS applied in such a way to enable maximum loading possible in NORMAL USE but with consideration of the specifications in the ACCOMPANYING DOCUMENTS.

d) Test conditions:

The black test corner consists of a draft-free corner with 20 mm plywood on the joining walls (at right angle), painted flat-black. A grid of holes, 7 mm in diameter, spaced 100 mm apart, covers the entire surface of the plywood making it resemble pegboard. Attach blackened copper or brass discs with thermocouples to the holes. Place these discs in enough holes to cover the surface area relative to the product being tested. The linear dimensions of the test corner must be at least 115 % of the linear dimensions of the DUT. Attach thermocouples to wall surfaces in hottest area of DUT ENCLOSURE. If it is necessary to use copper or brass disks, then attach the thermocouple to a 15 mm ± 5 mm dia, 1 mm ± 0,5 mm thick disk at hottest location.

When thermocouples are used to determine the temperature of windings, reduce the temperature limits by 10 °C. In this case, the measurement is made by devices so chosen and positioned that they have a negligible effect on the temperature of the part under test.

Determine the temperature of electrical insulation, other than that of windings, on the surface of the insulation at places where failure could cause:

– a short circuit,
– bridging of a MEANS OF PROTECTION,
– bridging of insulation, or
– reduction of CREEPAGE DISTANCES or AIR CLEARANCES below the values specified for the insulation type.

IECNORM.COM : Click to view the full PDF of IEC TR 62354:2014

5 Loctite® is the trade name of a product supplied by Henkel Corporation. This information is given for the convenience of users of this document and does not constitute an endorsement by IEC of the product named. Equivalent products may be used if they can be shown to lead to the same results.”

13.4.17 Normal heating *(continued)*

Standard(s):	Subclause(s):	13.4.17 Normal heating
IEC 60601-1:2005	11.1	

Examples of places where temperatures might be measured include the point of separation of cores of a multicore cord and where insulated wires enter lamp holders.

Suspend a HAND-HELD DUT in its normal position in still air.

A DUT intended for installation in a cabinet or wall is built in as required by technical description, using dull black painted plywood walls, 10 mm thick when representing cabinet walls if the technical description so specifies and 20 mm thick when representing building walls.

Operate a DUT having heating elements as in NORMAL USE with all heating elements energized, unless prevented by switching interlocks, at a supply voltage equal to 110 % of the maximum RATED voltage.

Operate a motor-operated DUT under normal load and normal DUTY CYCLE at the least favourable voltage between 90 % of the minimum RATED voltage and 110 % of the maximum RATED voltage.

Test combined heating and motor operated and other ME EQUIPMENT at 110 % of the maximum RATED voltage and at 90 % of the minimum RATED voltage.

When modules are tested separately, the testing configuration should simulate the worst-case conditions of NORMAL USE that might affect the test result.

For an acceptable use of thermocouples, refer to Annex N.

e) Test set-up and PROCEDURE:

1) Operate the DUT in standby/quiescent mode until THERMAL STABILITY is reached. Then operate the DUT in NORMAL USE consecutive cycles until THERMAL STABILITY is again achieved, or for 7 h, whichever is shorter. Base the loading on the MANUFACTURER'S recommendations according to the ACCOMPANYING DOCUMENTS. The on and off periods for each cycle are the RATED on and off periods according to the MANUFACTURER'S ACCOMPANYING DOCUMENTS.

2) The preferred temperature method for windings is the resistance method. The value of temperature rise of a copper winding is calculated from the formula:

$$\Delta T = R_2 - R_1/R_1 \times (234{,}5 + T_1) - (T_2 - T_1)$$

Where:

ΔT is the temperature rise in °C;

R_1 is the resistance at the beginning of the test in Ω;

R_2 is the resistance at the end of the test in Ω;

T_1 is the room temperature at the beginning of the test in °C;

T_2 is the room temperature at the end of the test in °C.

At the beginning of the test, windings are at room temperature.

Take the resistance measurement as soon as possible after switching off and then periodically thereafter so that a curve of resistance against time can be plotted to determine the value at the instant of switching off.

3) Determine the maximum temperature by making the measurement, calculating the temperature rise and adding it to the maximum permissible ambient temperature. When thermal regulating devices make this method inappropriate, justify alternative methods for measurements in the RISK MANAGEMENT FILE.

In some situations, it is preferable to make the measurements at the maximum permissible ambient temperature such that no calculation is necessary.

When the resistance method is impractical to be used, the thermocouples are recommended.

IECNORM.COM : Click to view the full PDF of IEC TR 62354:2014

13.4.17 Normal heating *(continued)*

Standard(s):	Subclause(s):	13.4.17 Normal heating
IEC 60601-1:2005	11.1	

f) Presentation of the test results:

TABLE: Normal temperature			
Supply voltage:		Test condition:	
Ambient temperature: °C		Duration of test:	
Measuring location		**Measured temperature °C**	**Remarks**
COR – indicates measurements taken using change-of-resistance method			

During the test THERMAL CUT-OUTS **did not operate/operated.**

Sealing or potting compound **did not flow out/flowed out.**

TABLE: Temperature by change of resistance (COR) method							
Winding designation	T_1 °C	R_1 Ω	T_2 °C	R_2 Ω	ΔT °C	$T=T_2+\Delta T$ °C	**Remarks**

IECNORM.COM : Click to view the full PDF of IEC TR 62354:2014

13.4.18 Operation to a specified temperature

Standard(s): IEC 60601-1:2005+AMD1:2012	Subclause(s): 5.3	13.4.18 Operation to a specified temperature

a) Equipment needed for the test:

1) Temperature probe
2) Environmental chamber

b) Safety precautions during the test:

Use normal laboratory safety PROCEDURES during this test.

c) Test sample preparation:

For the INTENDED USE in NORMAL CONDITION.

d) Test conditions:

1) ***IEC 60601-1:1988***
   - Temperature between +10 °C and +40 °C
   - Humidity between 30 % and 75 %
   - Atmospheric pressure between 700 hPa and 1 060 hPa
   - Temperature of water at inlet of water cooled equipment not exceeding 25 °C
2) ***IEC 60601-1:2005***
   - Environmental conditions as specified by the MANUFACTURER

Further test conditions as specified in the relevant clauses.

e) Test set-up and PROCEDURE:

1) ***IEC 60601-1:1988***

   Carry out all tests, of which the test results depend on the maximum allowable ambient temperature (Clause 42 – Excessive temperatures and Clause 52 – Abnormal operation and fault conditions) either at the maximum allowable temperature specified by the MANUFACTURER (at 40 °C if not specified), or compensate for the temperatures, measured at an ambient temperature within the specified range, by calculation to the highest ambient temperature.

2) ***IEC 60601-1:2005+AMD1:2012***

   Carry out all tests, of which the test results depend on the maximum allowable ambient temperature, either at the maximum allowable temperature specified by the MANUFACTURER, or compensate for the temperatures, measured at an ambient temperature within the specified range, by calculation to the highest ambient temperature.

f) Presentation of the test results:

Document the ambient temperature, at which the tests were carried out for all relevant test clauses. As far as applicable, measured values are compensated either to the highest ambient temperature stated by the MANUFACTURER or to 40 °C.

IECNORM.COM : Click to view the full PDF of IEC TR 62354:2014

13.4.19 Identification of source of ignition

Standard(s): IEC 60601-1:2005	Subclause(s): 11.2.2.1	13.4.19 Identification of source of ignition

a) Equipment needed for the test:

1) Spark ignition test apparatus in Figure 27
2) Oxygen source
3) Voltmeter
4) Ammeter
5) Voltage source/current source

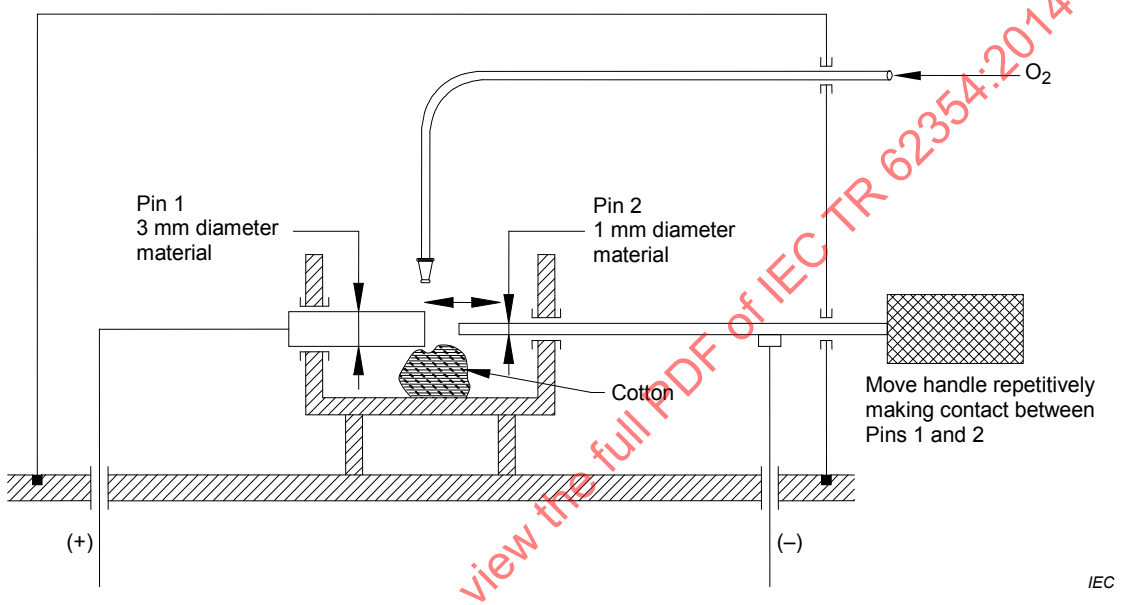

Figure 27 – Spark ignition test apparatus
(IEC 60601-1:2005, Figure 34)

b) Safety precautions during the test:

Special safety PROCEDURES for working in an OXYGEN RICH ENVIRONMENT.

c) Test sample preparation:

This test determines whether a source of ignition exists.

IECNORM.COM : Click to view the full PDF of IEC TR 62354:2014

13.4.19 Identification of source of ignition *(continued)*

Standard(s): IEC 60601-1:2005	Subclause(s): 11.2.2.1	13.4.19 Identification of source of ignition

d) Test conditions:

For this test, use material sample for which a source of ignition exists.

Consider the most unfavorable test conditions (oxygen concentration, electrical parameters, etc.) for the ME EQUIPMENT.

SINGLE FAULT CONDITIONS related to OXYGEN RICH ENVIRONMENTS in conjunction with ME EQUIPMENT include the following:

– Failure of a ventilation system.
– Failure of a barrier.
– Failure of a component that creates a source of ignition.
– Failure of insulation (whether solid material or spacing) providing the equivalent of at least one MEANS OF PATIENT PROTECTION but less than two MEANS OF PATIENT PROTECTION that could create a source of ignition.
– Failure of a pneumatic component that results in leakage of oxygen-enriched gas.

e) Test set-up and PROCEDURE:

1) Place two contact pins made of the material to be considered in opposition (see Figure 27). One pin has a diameter of 1 mm, the other a diameter of 3 mm.
2) Connect the electrical source to the pins as shown in Figure 28 to Figure 29.
3) Place a piece of cotton close to the contact surfaces of the two pins. Constantly flush the contacts with oxygen at a speed of less than 0,5 m/s via a tube. Move the cathode to the anode to close the contacts and pull it back to open them again.
4) Perform at least 300 trials before deciding that the sparks do not trigger ignition.

   If the sparks get smaller because of bad surfaces of the electrodes, clean the electrodes with a file. Replace the cotton if it gets black because of oxidization.
5) In Figure 29 and Figure 30, choose the resistance used to control current flowing into the inductor and the time constant for charging the capacitor so that it has minimal impact on the energy of the spark. Verify this by visual inspection without the capacitor in place or with the inductor shorted.
6) Check by inspection of the design and measurement or calculation of power, energy and temperature values in NORMAL CONDITION and SINGLE FAULT CONDITION if the electrical components in a compartment with an OXYGEN RICH ENVIRONMENT have power supplies with limited energy levels.
7) Measure the oxygen concentration long enough to ensure that the highest possible concentration of oxygen occurs. Select the least favourable control settings. Select the leaking conditions of oxygen to provide the minimum leak that the OPERATOR might detect (e.g. because of a failure of the function of the device). An oxygen concentration greater than 25 % in the presence of parts or components that could be a source of ignition, including at the moment energy is applied, constitutes a failure.
8) Check by inspection of the documentation provided by the MANUFACTURER including the RISK MANAGEMENT FILE if a compartment that contains parts or components that can be a source of ignition under a SINGLE FAULT CONDITION is separated from another compartment that contains an OXYGEN RICH ENVIRONMENT by sealing all joints and any holes for cables, shafts or for other purpose.
9) Only check if ignition occurs under SINGLE FAULT CONDITIONS within the ENCLOSURE, the fire self-extinguishes rapidly and no hazardous amount of toxic gases would reach the PATIENT.

IECNORM.COM : Click to view the full PDF of IEC TR 62354:2014

13.4.19 Identification of source of ignition *(continued)*

Standard(s):	Subclause(s):	13.4.19 Identification of source of ignition
IEC 60601-1:2005	11.2.2.1	

IECNORM.COM : Click to view the full PDF of IEC TR 62354:2014

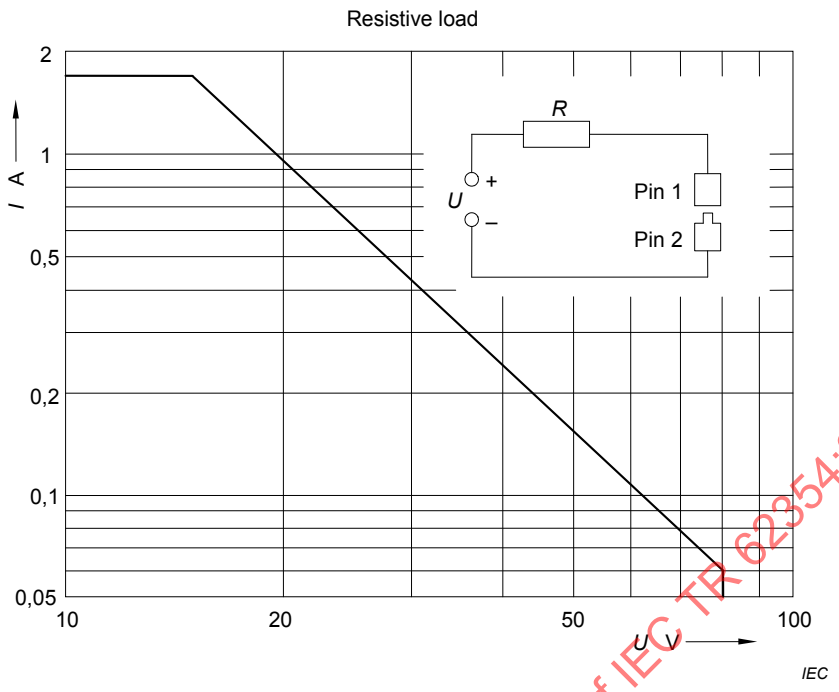

Figure 28 – Maximum allowable current *I* as a function of the maximum allowable voltage *U* measured in a purely resistive circuit in an OXYGEN RICH ENVIRONMENT

(IEC 60601-1:2005, Figure 35)

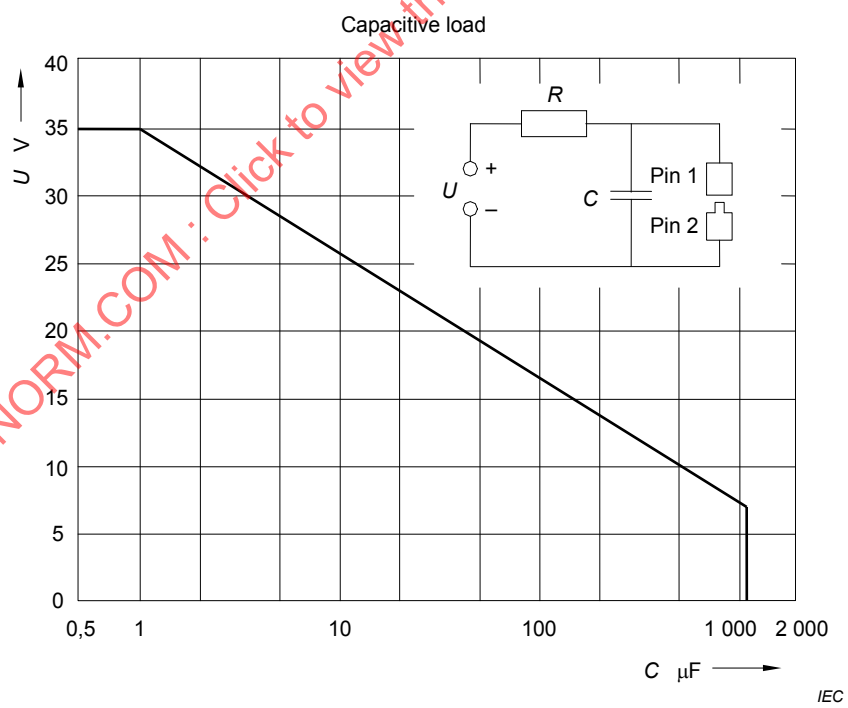

Figure 29 – Maximum allowable voltage *U* as a function of the capacitance *C* measured in a capacitive circuit used in an OXYGEN RICH ENVIRONMENT
(IEC 60601-1:2005, Figure 36)

IECNORM.COM : Click to view the full PDF of IEC TR 62354:2014

13.4.19 Identification of source of ignition *(continued)*

Standard(s):	Subclause(s):	13.4.19 Identification of source of ignition
IEC 60601-1:2005	11.2.2.1	

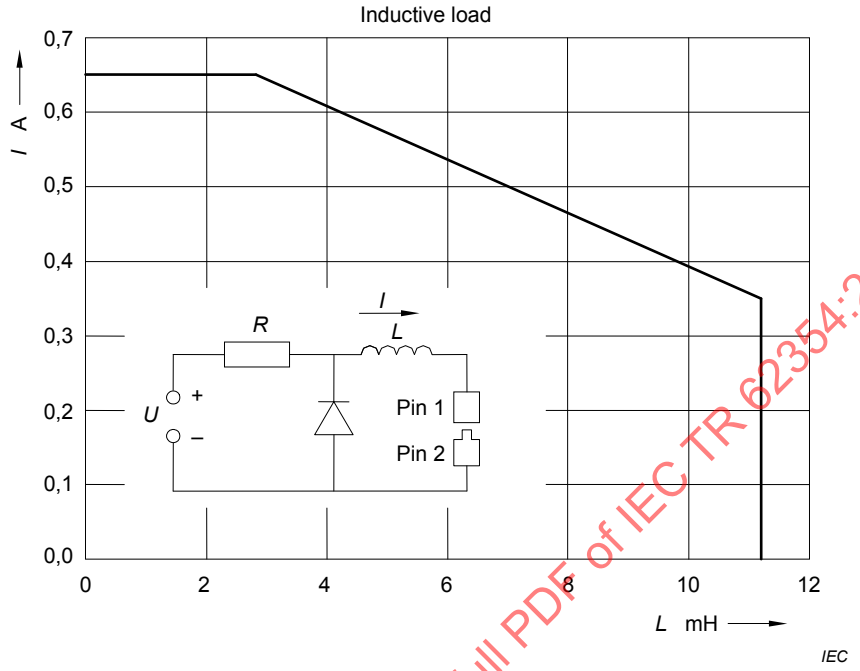

Figure 30 – Maximum allowable current *I* as a function of the inductance *L* measured in an inductive circuit in an OXYGEN RICH ENVIRONMENT

(IEC 60601-1:2005, Figure 37)

f) Presentation of the test results:

Identify the conditions under which the test was performed.

The situation with the highest voltage or current respectively and no ignition defines the upper limit. A safe upper limit is given by dividing the upper limit of voltage or current respectively by the safety margin factor of three.

NOTE The safety margin factor covers the uncertainty of sparking experiments and the variability of the underlying parameters like pressure or quality of cotton or of the contact materials.

IECNORM.COM : Click to view the full PDF of IEC TR 62354:2014

13.4.20 Interruption of power supply

Standard(s): IEC 60601-1:2005+AMD1:2012	Subclause(s): 11.8	13.4.20 Interruption of power supply
a) Equipment needed for the test: 1) Test sample with relevant power supplies. 2) Equipment to verify ESSENTIAL PERFORMANCE		
b) Safety precautions during the test: Use normal laboratory safety PROCEDURES during this test.		
c) Test sample preparation: No special preparation.		
d) Test conditions: NORMAL CONDITION		
e) Test set-up and PROCEDURE: Interrupt and restore the power supply of the DUT, taking into account the different ME EQUIPMENT'S states. When interrupting and restoring the power supply, consider different operating modes and interruption durations including requirements from particular standards.		
f) Presentation of the test results: Interruption of the power supply **did/did not** result in the loss of BASIC SAFETY or ESSENTIAL PERFORMANCE.		

IECNORM.COM : Click to view the full PDF of IEC TR 62354:2014

13.4.21 Limited power circuit

Standard(s):	Subclause:	13.4.21 Limited power circuit
IEC 60601-1:2005+AMD1:2012	13.1.2	

a) Equipment needed for the test:

1) Adjustable load
2) Watt-meter
3) Watch (1 min)

b) Safety precautions during the test:

Use normal laboratory safety PROCEDURES during this test.

c) Test sample preparation:

Make the relevant supply circuit available (see Annex D).

d) Test conditions:

NORMAL CONDITION

e) Test set-up and PROCEDURE:

Adapt the adjustable load to the supply circuit and set on 15 W. Adjust the test load as needed to continually draw 15 W.

If the power dissipation is less than 15 W after 1 min, the circuit is limiting power dissipation to less than 15 W.

f) Presentation of the test results:

TABLE: Power dissipation

Supply circuit to be examined	Power dissipation at the start of the test W	Power dissipation after 1 min W	Limited power circuit Yes/No

IECNORM.COM : Click to view the full PDF of IEC TR 62354:2014

13.4.22 Failures of THERMOSTATS

Standard(s): IEC 60601-1:2005	Subclause(s): 13.2.4	13.4.22 Failure of THERMOSTATS

a) Equipment needed for the test:

1) Temperature sensors (thermocouples) and recorder
2) Test corner

b) Safety precautions during the test:

Suitable fire extinguisher

Use normal laboratory safety PROCEDURES during this test.

c) Test sample preparation:

One representative sample loaded with all optional ACCESSORIES.

d) Test conditions:

Do not perform this test If an independent non-SELF-RESETTING THERMAL CUT-OUT is provided that prevents an unacceptable RISK in case of a failure in the THERMOSTAT.

e) Test set-up and PROCEDURE:

1) Inspect the circuit diagram to determine whether short-circuiting or interrupting the THERMOSTAT is the less favourable test condition. Use that mechanism to short-circuit or interrupt the THERMOSTAT.
2) Place the DUT in the test corner.
3) Operate the DUT and record temperatures with the thermocouple method.
4) Operate the DUT at 90 % and 110 % of RATED voltage.
5) Test each THERMOSTAT by itself if multiple THERMOSTATS exist.

f) Presentation of the test results:

For SUPPLEMENTARY and REINFORCED INSULATION of thermoplastic materials, perform the ball-pressure test (test 13.3.4) at a temperature 25 °C higher than that measured during these tests.

Same result table as for normal heating in test 13.4.17 f) and same compliance criteria as in test 13.2.24 f).

IECNORM.COM : Click to view the full PDF of IEC TR 62354:2014

13.4.23 Impairment of cooling

Standard(s): IEC 60601-1:2005+AMD1:2012	Subclause(s): 13.2.7	13.4.23 Impairment of cooling

a) Equipment needed for the test:

1) Temperature sensors (thermocouples) and recorder
2) Accessories for blocking vent holes/grills, etc.
3) Test corner

b) Safety precautions during the test:

Suitable fire extinguisher

Use normal laboratory safety PROCEDURES during this test.

c) Test sample preparation:

One representative sample loaded with all optional ACCESSORIES.

d) Test conditions:

As for normal heating (test 13.4.17).

e) Test set-up and PROCEDURE:

1) Place the DUT in the test corner.
2) Impairment of cooling simulates one fault after the other, for example:
   - Lock or disconnect single ventilation fans, whichever is least favourable, consecutively.
   - Impair ventilation through openings in top and sides by covering those ENCLOSURE openings or positioning the DUT against walls of test corner.
   - Block filters.
   - Interrupt the flow of a cooling agent.
3) Operate the DUT with simulation of impairments of cooling.
4) Record temperatures using the thermocouple method.

f) Presentation of the test results:

For SUPPLEMENTARY and REINFORCED INSULATION of thermoplastic materials, perform the ball-pressure test (test 13.3.4) at a temperature 25 °C higher than that measured during these tests.

Same result table as for normal heating in test 13.4.17 f) and same compliance criteria as in test 13.2.24 f).

IECNORM.COM : Click to view the full PDF of IEC TR 62354:2014

13.4.24 Locking of moving parts

Standard(s): IEC 60601-1:2005	Subclause(s): 13.2.8	13.4.24 Locking of moving parts

a) Equipment needed for the test:

1) Temperature sensors (thermocouples) and recorder
2) Ohmmeter
3) Test corner

b) Safety precautions during the test:

Suitable fire extinguisher

Use normal laboratory safety PROCEDURES during this test.

c) Test sample preparation:

One representative sample loaded with all optional ACCESSORIES.

d) Test conditions:

Lock moving parts if:

– accessible moving parts can be jammed; or
– the DUT can be operated while unattended (this includes ME EQUIPMENT which is automatically or remotely controlled); or
– the DUT has one or more motors with a locked rotor torque smaller than the full load torque.

Only lock one moving part for DUT with more than one moving part as described above. If a SINGLE FAULT CONDITION can lock multiple motors, then lock all motors simultaneously.

Do not test components, construction or the supply circuit if the power dissipation in SINGLE FAULT CONDITION is less than or equal to 15 W.

Power the DUT with the least favourable voltage between 90 % and 110 % of the RATED voltage.

e) Test set-up and PROCEDURE:

1) Place the DUT in the test corner.
2) Operate the DUT with all moving parts locked.
3) Operate a motor-operated DUT starting from a COLD CONDITION, at RATED voltage or at the upper limit of the RATED voltage range for the following periods of time:
   a) 30 s for:
      – HAND-HELD ME EQUIPMENT;
      – ME EQUIPMENT which has to be kept switched on by hand; or
      – ME EQUIPMENT which has to be kept under physical load by hand;
   b) for 5 min for other ME EQUIPMENT intended only for attended use (attended use excludes automated or remotely controlled ME EQUIPMENT that could operate when the OPERATOR is not present);
   c) for the maximum period of a timer, if such a device terminates the operation, for ME EQUIPMENT not listed under a) or b);
   d) for as long as necessary, to establish steady thermal conditions for all the remaining ME EQUIPMENT.

IECNORM.COM : Click to view the full PDF of IEC TR 62354:2014

13.4.24 Locking of moving parts *(continued)*

Standard(s): IEC 60601-1:2005	Subclause(s): 13.2.8	13.4.24 Locking of moving parts

4) Determine the temperatures of windings with the ΔR measurement method (with an ohmmeter) at the end of a specified test period (for steady-state), or at the instant of operation of fuses, THERMAL CUT-OUTS, motor protective devices and the like.

5) Record other temperatures using the thermocouple method.

6) For motors located in circuits with a voltage not exceeding 42,4 V peak a.c. or 60 V d.c. and where difficulty is experienced in obtaining accurate temperature measurements due to the small size or design of the motor, cover the motor with a single layer of bleached cotton cheesecloth of approximately 40 g/m^2 (bleached cotton material, 26 m^2 to 28 m^2 per kg mass and 13 threads per cm in one direction and 11 threads per cm in the other).

f) Presentation of the test results:

There **was/was no** evidence of emission of flames, molten metal, poisonous or ignitable substance in hazardous quantities.

There **was/was no** evidence of deformation of ENCLOSURES to such an extent that compliance with IEC 60601-1:2005 is impaired.

After the tests, there **was/was no** evidence that the setting of THERMAL CUT-OUTS and OVER-CURRENT RELEASES has not changed (by heating, vibration or other causes) sufficiently to affect their safety function.

For SUPPLEMENTARY and REINFORCED INSULATION of thermoplastic materials, perform the ball-pressure test (test 13.3.4) at a temperature 25 °C higher than that measured during these tests.

There **was/was no** evidence of ignition of the cheesecloth.

Temperatures of APPLIED PARTS **did/did not** exceed the allowed values from Table 11.

Temperatures of parts likely to be touched **did/did not** exceed the allowable values from Table 12.

Temperatures $T \times 1,5 - 12,5$ °C of other components and materials and other cases **did/did not** exceed the allowable values from Table 13.

Temperatures of windings **did/did not** exceed the allowed values from the appropriate Table 14, Table 15 and

Table 16.

Limits for LEAKAGE CURRENT in SINGLE FAULT CONDITION **were/were not** exceeded.

Limits for voltage from ACCESSIBLE PARTS including APPLIED PARTS **were/were not** exceeded.

Use the same result table as for normal heating [test 13.4.17 f)].

IECNORM.COM : Click to view the full PDF of IEC TR 62354:2014

13.4.24 Locking of moving parts *(continued)*

Standard(s):	Subclause(s):	13.4.24 Locking of moving parts
IEC 60601-1:2005	13.2.8	

Table 11 – Allowable maximum temperatures for skin contact with ME EQUIPMENT APPLIED PARTS
(IEC 60601-1:2005, Table 24)

APPLIED PARTS of ME EQUIPMENT		Maximum temperature [a b] °C		
		Metal and liquids	Glass, porcelain, vitreous material	Moulded material, plastic, rubber, wood
APPLIED PART having contact with the PATIENT for a time "*t*"	*t* < 1 min	51	56	60
	1 min ≤ *t* < 10 min	48	48	48
	10 min ≤ *t*	43	43	43

[a] These temperature limit values are applicable for the healthy skin of adults. They are not applicable when large areas of the skin (10 % of total body surface or more) can be in contact with a hot surface. They are not applicable in the case of skin contact with over 10 % of the head surface. Where this is the case, appropriate limits shall be determined and documented in the RISK MANAGEMENT FILE.

[b] Where it is necessary for APPLIED PARTS to exceed the temperature limits of Table 24 in order to provide clinical benefit, the RISK MANAGEMENT FILE shall contain documentation showing that the resulting benefit exceeds any associated increase in RISK.

Table 12 – Allowable maximum temperatures for ME EQUIPMENT parts that are likely to be touched

(IEC 60601-1:2005, Table 23)

ME EQUIPMENT and its parts		Maximum temperature [a] °C		
		Metal and liquids	Glass, porcelain, vitreous material	Moulded material, plastic, rubber, wood
External surfaces of ME EQUIPMENT that are likely to be touched for a time "*t*"	*t* < 1 s	74	80	86
	1 s ≤ *t* < 10 s	56	66	71
	10 s ≤ *t* < 1 min	51	56	60
	1 min ≤ *t*	48	48	48

[a] These temperature limit values are applicable for touching the healthy skin of adults. They are not applicable when large areas of the skin (10 % of total body surface or more) can be in contact with a hot surface. This also applies in the case of skin contact with over 10 % of the head surface. Where this is the case, appropriate limits shall be determined and documented in the RISK MANAGEMENT FILE.

IECNORM.COM : Click to view the full PDF of IEC TR 62354:2014

13.4.24 Locking of moving parts *(continued)*

Standard(s):	Subclause(s):	13.4.24 Locking of moving parts
IEC 60601-1:2005	13.2.8	

Table 13 – Allowable maximum temperatures of parts
(IEC 60601-1:2005, Table 22)

Parts	Maximum Temperature °C
Insulation, including winding insulation [a]	
– of Class A Material	105
– of Class E Material	120
– of Class B Material	130
– of Class F Material	155
– of Class H Material	180
Parts with T marking	T [b]
Other components and materials	[c]
Parts in contact with flammable liquid with flash-point of T °C	T-25
Wood	90

[a] The classification of insulating materials is in accordance with IEC 60085. Any incompatibility of the materials of an insulating system that could reduce the maximum temperature limit of the system below the limits of the individual materials shall be considered.

[b] T marking refers to the marked maximum operating temperature.

[c] For each material and component, account shall be taken of the temperature ratings for each material or component to determine the appropriate maximum temperature. Each component shall be used in accordance with its temperature rating. Where doubt exists, the ball pressure test of 8.8.4.2 should be performed.

Table 14 – Temperature limits of motor windings

(IEC 60601-1:2005, Table 26)

Temperature in °C

Type of ME EQUIPMENT	Insulation class				
	Class A	Class B	Class E	Class F	Class H
ME EQUIPMENT provided with a timer and not intended for unattended use and ME EQUIPMENT to be operated for 30 s or 5 min	200	225	215	240	260
Other ME EQUIPMENT					
– if impedance-protected, maximum value	150	175	165	190	210
– if protected by protection devices that operate during the first hour, maximum value	200	225	215	240	260
– after the first hour, maximum value	175	200	190	215	235
– after the first hour, arithmetic average	150	175	165	190	210

NOTE The temperature limits in this table were derived from IEC 61010-1:2001.

IECNORM.COM : Click to view the full PDF of IEC TR 62354:2014

13.4.24 Locking of moving parts *(continued)*

Standard(s): IEC 60601-1:2005	Subclause(s): 13.2.8	13.4.24 Locking of moving parts

Table 15 – Maximum motor winding steady-state temperature

(IEC 60601-1:2005, Table 27)

Insulation class	Maximum temperature °C
A	140
B	165
E	155
F	180
H	200

Table 16 – Maximum allowable temperatures of transformer windings under overload and short-circuit conditions at 25 °C (± 5 °C) ambient temperature

(IEC 60601-1:2005, Table 31)

Parts	Maximum temperature °C
Windings and core laminations in contact therewith, if the winding insulation is:	
– of Class A material	150
– of Class B material	175
– of Class E material	165
– of Class F material	190
– of Class H material	210

IECNORM.COM : Click to view the full PDF of IEC TR 62354:2014

13.4.25 Interruption or short circuit of motor capacitors

Standard(s): IEC 60601-1:2005	Subclause(s): 13.2.9	13.4.25 Interruption or short circuit of motor capacitors

a) Equipment needed for the test:

1) Temperature sensors (thermocouples) and recorder
2) Ohmmeter
3) Voltmeter

b) Safety precautions during the test:

Suitable fire extinguisher

Use normal laboratory safety PROCEDURES during this test.

c) Test sample preparation:

One representative sample loaded with all optional ACCESSORIES.

d) Test conditions:

Do not perform the test with a short-circuited capacitor if the motor is provided with a capacitor complying with the requirements for Class P2 capacitors according to IEC 60252-1 and the ME EQUIPMENT is not intended for unattended use (including automatic or remote control).

e) Test set-up and PROCEDURE:

1) Operate motors with a capacitor in the circuit of an auxiliary winding are operated:
   - with the capacitor short-circuited, or
   - open-circuited in turn.
2) Operate a motor-operated DUT starting from COLD CONDITION, at RATED voltage or at the upper limit of the RATED voltage range for the following periods of time:
   a) 30 s for:
      - HAND-HELD ME EQUIPMENT;
      - ME EQUIPMENT which has to be kept switched on by hand; or
      - ME EQUIPMENT which has to be kept under physical load by hand.
   b) For 5 min for other ME EQUIPMENT intended only for attended use (attended use excludes automated or remotely controlled ME EQUIPMENT that could operate when the OPERATOR is not present).
   c) For the maximum period of a timer, if such a device terminates the operation, for ME EQUIPMENT not listed under a) or b).
   d) For as long as necessary, to establish steady thermal conditions for all the remaining ME EQUIPMENT.
3) Determine the temperatures of windings with the ΔR measurement method (with an ohmmeter) at the end of a specified test period (for steady-state), or at the instant of operation of fuses, THERMAL CUT-OUTS, motor protective devices and the like.
4) Record other temperatures using the thermocouple method.
5) For motors located in circuits with a voltage not exceeding 42,4 V peak a.c. or 60 V d.c. and where difficulty is experienced in obtaining accurate temperature measurements due to the small size or design of the motor, cover the motor with a single layer of bleached cotton cheesecloth of approximately 40 g/m^2 (bleached cotton material, 26 m^2 to 28 m^2 per kg mass and 13 threads per cm in one direction and 11 threads per cm in the other).
6) Measure the voltage across the capacitor.

IECNORM.COM : Click to view the full PDF of IEC TR 62354:2014

13.4.25 Interruption or short circuit of motor capacitors *(continued)*

Standard(s): IEC 60601-1:2005	Subclause(s): 13.2.9	13.4.25 Interruption or short circuit of motor capacitors

f) Presentation of the test results:

There **was/was no** evidence of emission of flames, molten metal, poisonous or ignitable substance in hazardous quantities.

There **was/was no** evidence of deformation of ENCLOSURES to such an extent that compliance with IEC 60601-1:2005 is impaired.

After the tests, there **was/was no** evidence that the setting of THERMAL CUT-OUTS and OVER-CURRENT RELEASES has not changed (by heating, vibration or other causes) sufficiently to affect their safety function.

For SUPPLEMENTARY and REINFORCED INSULATION of thermoplastic materials, perform the ball-pressure test (test 13.3.4) at a temperature 25 °C higher than that measured during these tests.

There **was/was no** evidence of ignition of the cheesecloth.

Temperatures of APPLIED PARTS **did/did not** exceed the allowed values from Table 11.

Temperatures of parts likely to be touched **did/did not** exceed the allowable values from Table 12.

Temperatures $T \times 1{,}5 - 12{,}5$ °C of other components and materials and other cases **did/did not** exceed the allowable values from Table 13.

Temperatures of windings **did/did not** exceed the allowed values from the appropriate Table 14, Table 15 and

Table 16.

Limits for LEAKAGE CURRENT in SINGLE FAULT CONDITION **were/were not** exceeded.

Limits for voltage from ACCESSIBLE PARTS including APPLIED PARTS **were/were not** exceeded.

Use the same result table as for normal heating [test 13.4.17 f)].

IECNORM.COM : Click to view the full PDF of IEC TR 62354:2014

13.4.26 Motor running overload

Standard(s): IEC 60601-1:2005	Subclause(s): 13.2.13.3 b), 13.2.13.4	13.4.26 Motor running overload

a) Equipment needed for the test:

1) Temperature sensors (thermocouples) and recorder
2) Ohmmeter
3) Voltmeter
4) Ammeter

b) Safety precautions during the test:

Suitable fire extinguisher

Use normal laboratory safety PROCEDURES during this test.

c) Test sample preparation:

One representative sample loaded with all optional ACCESSORIES

d) Test conditions:

Check motors for running overload protection if they are:

– intended to be remotely controlled or automatically controlled (by a single control device without redundant protection), or
– likely to be operated continuously whilst unattended.

For ME EQUIPMENT containing motors as well as heating parts, perform testing at the prescribed voltage, with the motor part and the heating part operated simultaneously so as to produce the least favourable condition.

Operate ME EQUIPMENT with three-phase motors with normal load, connected to a three-phase (SUPPLY MAINS) with one phase disconnected.

Test consecutively If more than one of the tests is applicable for the same DUT.

Only perform the running overload test for motors located in circuits with a voltage not exceeding 42,4 V peak a.c. or 60 V d.c. if a possibility of an overload occurring is determined by inspection or by review of the design. The test need not be performed, for example, where electronic drive circuits maintain a substantially constant drive current.

e) Test set-up and PROCEDURE:

1) Operate the DUT under normal load conditions at RATED voltage or at the maximum of the RATED voltage range, until steady thermal conditions are achieved (see the test for normal heating [test 13.4.17]).
2) Increase the load so that the current is increased in appropriate steps while the supply voltage being maintained at its original value.
3) When steady thermal conditions are established, increase the load. Progressively increase the load in appropriate steps until the overload protection operates, or until no further temperature rise is noted.
4) If the load cannot be changed in appropriate steps in ME EQUIPMENT, remove the motor from the DUT in order to perform the test.
5) ME EQUIPMENT RATED for short-time or intermittent operation other than:
   – HAND-HELD ME EQUIPMENT;
   – ME EQUIPMENT which has to be kept switched on by hand;
   – ME EQUIPMENT which has to be kept under physical load by hand; or
   – ME EQUIPMENT with a timer and a back-up system

   is operated under normal load and at RATED voltage or at the upper limit of the RATED voltage range until the peak temperature does not increase by more than 5 °C in 1 h, or until the protective device operates.

IECNORM.COM : Click to view the full PDF of IEC TR 62354:2014

13.4.26 Motor running overload *(continued)*

Standard(s): IEC 60601-1:2005	Subclause(s): 13.2.13.3 b), 13.2.13.4	13.4.26 Motor running overload

6) If in NORMAL USE a load-reducing device in ME EQUIPMENT operates, continue the test with the DUT running idle.

7) OPERATE ME EQUIPMENT starting from the COLD CONDITION, at RATED voltage or at the upper limit of the RATED voltage range for the following periods of time:

   a) 30 s for:

      – HAND-HELD ME EQUIPMENT;

      – ME EQUIPMENT which has to be kept switched on by hand; or

      – ME EQUIPMENT which has to be kept under physical load by hand;

   b) for 5 min for other ME EQUIPMENT intended only for attended use (attended use excludes automated or remotely controlled ME EQUIPMENT that could operate when the OPERATOR is not present);

   c) for the maximum period of a timer, if such a device terminates the operation, for ME EQUIPMENT not listed under a) or b);

   d) for as long as necessary, to establish steady thermal conditions for all the remaining ME EQUIPMENT.

8) Determine motor winding temperatures when THERMAL STABILITY conditions are established or immediately before the operation of the protective device.

9) Determine temperatures of windings with the ΔR measurement method (with an ohmmeter) at the end of a specified test period (for steady-state), or at the instant of operation of fuses, THERMAL CUT-OUTS, motor protective devices and the like.

10) Record other temperatures using the thermocouple method.

11) For motors located in circuits with a voltage not exceeding 42,4 V peak a.c. or 60 V d.c. and where difficulty is experienced in obtaining accurate temperature measurements due to the small size or design of the motor, cover the motor with a single layer of bleached cotton cheesecloth of approximately 40 g/m^2 (bleached cotton material, 26 m^2 to 28 m^2 per kg mass and 13 threads per cm in one direction and 11 threads per cm in the other).

f) Presentation of the test results:

There **was/was no** evidence of emission of flames, molten metal, poisonous or ignitable substance in hazardous quantities.

There **was/was no** evidence of deformation of ENCLOSURES to such an extent that compliance with this standard is impaired.

After the tests, there **was/was no** evidence that the setting of THERMAL CUT-OUTS and OVER-CURRENT RELEASES has not changed (by heating, vibration or other causes) sufficiently to affect their safety function.

For SUPPLEMENTARY and REINFORCED INSULATION of thermoplastic materials, perform the ball-pressure test (test 13.3.4) at a temperature 25 °C higher than that measured during these tests.

There **was/was no** evidence of ignition of the cheesecloth.

Temperatures of APPLIED PARTS **did/did not** exceed the allowed values from Table 11.

Temperatures of parts likely to be touched **did/did not** exceed the allowable values from Table 12.

Temperatures $T \times 1{,}5 - 12{,}5$ °C of other components and materials and other cases **did/did not** exceed the allowable values from Table 13.

Temperatures of windings **did/did not** exceed the allowed values from the appropriate Table 14, Table 15 and

Table 16.

Limits for LEAKAGE CURRENT in SINGLE FAULT CONDITION **were/were not** exceeded.

IECNORM.COM : Click to view the full PDF of IEC TR 62354:2014

13.4.26 Motor running overload *(continued)*

Standard(s):	Subclause(s):	13.4.26 Motor running overload
IEC 60601-1:2005	13.2.13.3 b), 13.2.13.4	

Limits for voltage from ACCESSIBLE PARTS including APPLIED PARTS **were/were not** exceeded.

Upon cooling to room temperature, the applicable dielectric strength tests **did/did not** reveal breakdown.

Use the same result table as for normal heating [test 13.4.17 f)].

IECNORM.COM : Click to view the full PDF of IEC TR 62354:2014

13.4.27 Heating element overload

Standard(s): IEC 60601-1:2005	Subclause(s): 13.2.13.1, 13.2.13.2	13.4.27 Heating element overload

a) Equipment needed for the test:

1) Voltmeter
2) Ampere meter
3) Ohmmeter
4) Temperature sensor (thermocouples)
5) Dielectric strength tester
6) Ball-pressure test apparatus (Figure F.4)
7) Test corner

b) Safety precautions during the test:

Suitable fire extinguisher

Use normal laboratory safety PROCEDURES during this test.

c) Test sample preparation:

One representative sample loaded with all optional ACCESSORIES.

d) Test conditions:

This test applies to ME EQUIPMENT having thermostatically controlled heating elements:

– which are intended for built-in operation, or
– for unattended operation, or
– which have a capacitor not protected by a fuse or the like connected in parallel with the contacts of the THERMOSTAT.

Heating parts of ME EQUIPMENT are tested under all of the following conditions:

– as specified in the normal heating subclause of IEC 60601-1:2005 (Subclause 11.1) but without adequate heat discharge;
– with the ME EQUIPMENT operated in NORMAL CONDITION; and
– disabling any control which serves to limit the temperature, except a THERMAL CUT-OUT.

If the ME EQUIPMENT has more than one control, disable each in turn.

Do not test components, construction or the supply circuit if the power dissipation in SINGLE FAULT CONDITION is less than or equal to 15 W.

Power the DUT with a supply voltage of 90 % or 110 % of the RATED supply voltage whichever is the least favourable.

For ME EQUIPMENT with short-time rating, the test duration should equal the RATED operating time.

If, in any of the tests, a non-SELF-RESETTING THERMAL CUT-OUT operates, a heating element or an intentionally weak part ruptures, or if the current is otherwise interrupted before THERMAL STABILITY is established without the possibility of automatic restoration, the heating period is ended. However, if the interruption is due to the rupture of a heating element or of an intentionally weak part, repeat the test on a second sample. Open circuiting of a heating element or of an intentionally weak part in the second sample does not in itself entail a failure to comply. However, if either sample fails to comply with the conditions specified in Subclause 13.1.2 of IEC 60601-1:2005, it constitutes a failure.

IECNORM.COM : Click to view the full PDF of IEC TR 62354:2014

13.4.27 Heating element overload *(continued)*

Standard(s):	Subclause(s):	13.4.27 Heating element overload
IEC 60601-1:2005	13.2.13.1, 13.2.13.2	

e) Test set-up and PROCEDURE:

1) Place the DUT in the test corner.

2) DUT's having heating elements are tested as follows:

– For thermostatically controlled DUT's having heating elements that are intended for built-in or for unattended operation or that has a capacitor not protected by a fuse or the like connected in parallel with the contacts of the THERMOSTAT; by both tests described below.

– For DUT's having heating elements RATED for non-CONTINUOUS OPERATION; by both tests described below.

– For other DUT's having heating elements; but only the first test below.

NOTE If more than one of the tests below is applicable to the same DUT, these tests are performed consecutively.

3) ***Test 1:***

Test the DUT under the conditions for test 13.4.7, but without adequate heat discharge, at a supply voltage of 90 % or 110 % of the RATED supply voltage, whichever is least favourable.

If a non-SELF-RESETTING THERMAL CUT-OUT operates, or if the current is otherwise interrupted without the possibility of automatic restoration before THERMAL STABILITY is established, the operating period is ended. If interruption of the current does not occur, the DUT is switched off as soon as THERMAL STABILITY is established and is allowed to cool to approximately room temperature.

For DUT's RATED for non-CONTINUOUS OPERATION, the test duration should equal the RATED operating time.

4) ***Test 2:***

Test heating parts of the DUT with the DUT operated in NORMAL CONDITION, at the supply voltage 110 % of the RATED supply voltage and as specified in test 13.4.7. Meet the following test conditions:

– Disable control that serves to limit the temperature in NORMAL CONDITION, except a THERMAL CUT-OUT.

– If the DUT has more than one control, disabled each in turn.

– Operate the DUT at the RATED DUTY CYCLE until THERMAL STABILITY is achieved, irrespective of the RATED operating time.

f) Presentation of the test results:

There **was/was no** evidence of emission of flames, molten metal, poisonous or ignitable substance in hazardous quantities.

There **was/was no** evidence of deformation of ENCLOSURES to such an extent that compliance with IEC 60601-1:2005 is impaired.

After the tests, there **was/was no** evidence that the setting of THERMAL CUT-OUTS and OVER-CURRENT RELEASES changed (by heating, vibration or other causes) sufficiently to affect their safety function.

After the test, the insulation between the MAINS PART and the ENCLOSURE, when cooled down to approximately room temperature, **did/did not** withstand the relevant dielectric strength tests.

For ME EQUIPMENT which is immersed in, or filled with, conducting liquid in NORMAL USE, immerse the sample in or fill it with the conducting liquid or water, as appropriate, for 24 h before performing the dielectric strength test.

For SUPPLEMENTARY and REINFORCED INSULATION of thermoplastic materials, perform the ball-pressure test (test 13.3.4) at a temperature 25 °C higher than that measured during these tests.

IECNORM.COM : Click to view the full PDF of IEC TR 62354:2014

13.4.27 Heating element overload *(continued)*

Standard(s):	Subclause(s):	13.4.27 Heating element overload
IEC 60601-1:2005	13.2.13.1, 13.2.13.2	

Temperatures of APPLIED PARTS **did/did not** exceed the allowed values from Table 11.

Temperatures of parts likely to be touched **did/did not** exceed the allowable values from Table 12.

Temperatures $T \times 1,5 - 12,5$ °C of other components and materials and other cases **did/did not** exceed the allowable values from Table 13.

Temperatures of windings **did/did not** exceed the allowed values from the appropriate Table 14, Table 15 and

Table 16.

Limits for LEAKAGE CURRENT in SINGLE FAULT CONDITION **were/were not** exceeded.

Limits for voltage from ACCESSIBLE PARTS including APPLIED PARTS **were/were not** exceeded.

Use the same result table as for normal heating [test 13.4.17 f)].

IECNORM.COM : Click to view the full PDF of IEC TR 62354:2014

13.4.28 Rechargeable battery overcharge/discharge

Standard(s): IEC 60601-1:2005+AMD1:2012	Subclause(s): 15.4.3	13.4.28 Rechargeable battery overcharge/discharge

a) Equipment needed for the test:

1) Multimeter
2) Various test loads
3) Shorting box
4) D.C. ammeter

b) Safety precautions during the test:

Special laboratory safety PROCEDURES for work with batteries (i.e. lithium, etc.).

RISK of explosion. Remove battery before performing test 2.

c) Test sample preparation:

One representative test sample

Make the relevant supply circuit available (see Annex D).

d) Test conditions:

Battery overcharge/discharge test: Operate the DUT at RATED voltage or at the upper limit of the RATED voltage range with maximum normal load.

Excessive current and voltage protection test: Remove the battery from the DUT

Reversed battery connection test: NORMAL CONDITION

e) Test set-up and PROCEDURE:

1) ***Battery overcharge/discharge:***

   Inspect the design documentation for the charging circuit and battery charging specifications to verify overcharging will not occur in NORMAL CONDITION and SINGLE FAULT CONDITION. If any doubt exists, fault those specific components and verify no unacceptable RISK occurs.

2) ***Excessive current and voltage protection:***

   Inspect the battery supply circuit for the presence of protective means and the design documentation and RISK MANAGEMENT FILE. Verify that necessary fuse(s) or over-current protective means are in place and that the cross-sectional area of conductors are adequate to prevent source of fire HAZARDS. If any doubt exists, short circuit or open circuit those components that would enable maximum discharge current to flow and verify no unacceptable RISK occurs.

3) ***Reversed battery connection:***

   Where it is possible to insert the battery with incorrect polarity, reverse the battery connections and energize the DUT.

4) The short circuit test between the positive pole and the negative pole of an INTERNAL ELECTRICAL POWER SOURCE in the area between the INTERNAL ELECTRICAL POWER SOURCE output contacts and the subsequent protection device may be omitted if two MEANS OF OPERATOR PROTECTION are provided. Alternatively, a short-circuit test shall not result in any of the HAZARDOUS SITUATIONS in 13.1.2.

IECNORM.COM : Click to view the full PDF of IEC TR 62354:2014

13.4.28 Rechargeable battery overcharge/discharge *(continued)*

Standard(s): IEC 60601-1:2005+AMD1:2012	Subclause(s): 15.4.3	13.4.28 Rechargeable battery overcharge/discharge

f) Presentation of the test results:

Primary lithium batteries **did/did not** comply with the requirements of IEC 60086-4.

Secondary lithium batteries **did/did not** comply with the requirements of IEC 62133.

1) Battery overcharge/discharge and 2) Excessive current and voltage protection:

There **was/was no** cracking, rupturing or bursting of the battery jacket that could result in OPERATOR contact with battery electrolyte.

There **was/was** no explosion of the battery that could result in a RISK to persons.

There **was/was** no emission of flame or explosion of molten metal outside the DUT.

There **was/was no** emission of gases that could cause an unacceptable RISK.

3) Reversed battery connection:

There **was/was no** emission of flames, toxic gases, molten metal, and RISK of explosion.

4) Short circuit test if applicable **did/did not** lead to any of the HAZARDOUS SITUATIONS in 13.1.2.

IECNORM.COM : Click to view the full PDF of IEC TR 62354:2014

13.4.29 Mains transformers

Standard(s):	Subclause(s):	13.4.29 Mains transformers
IEC 60601-1:2005+AMD1:2012	15.5, 13.2.3	

a) Equipment needed for the test:

1) Voltmeter
2) Adjustable regulated a.c. supply or other similar voltage and frequency source depending on the input rating of transformer
3) Load resistors or electronic load
4) Ohmmeter
5) Dielectric strength tester

b) Safety precautions during the test:

1) Suitable fire extinguisher
2) Use normal laboratory safety PROCEDURES during this test.
3) See test 13.3.3 b) for recommended safety precautions during dielectric strength testing.

c) Test sample preparation:

Representative transformer sample(s) connected and loaded accordingly.

d) Test conditions:

Test each winding in turn, with the following parameters at the most adverse value:

– primary voltage maintained between 90 % to 110 % of RATED voltage;
– RATED input frequency;
– loads on other windings as in NORMAL USE.

For windings that use the change-of-resistance measurements (COR) method, place thermocouples at all other locations. Measure initial ambient temperature and a cold resistance of the windings.

Calculate the value of the temperature rise of a copper winding using the formula:

$$\Delta T = \frac{R_2 - R_1}{R_1}(234{,}5 + T_1) - (T_2 - T_1)$$

where

ΔT is the temperature rise in °C;

R_1 is the resistance at the beginning of the test in Ω;

R_2 is the resistance at the end of the test in Ω;

T_1 is the room temperature at the beginning of the test in °C;

T_2 is the room temperature at the end of the test in °C.

At the beginning of the test, windings are to be at room temperature.

When the resistance method is used, determine the resistance of windings at the end of the test by taking measurements as soon as possible after switching off, and then at short intervals so that a curve of resistance against time can be plotted to identify the value at the instant of switching off.

Test each secondary winding in turn; load all other secondary windings as in NORMAL USE.

Allow the DUT to cool to room temperature between tests.

When thermocouples are used, reduce the temperature limits by 10 °C. In this case, the measurement is made by devices so chosen and positioned that they have a negligible effect on the temperature of the part under test.

Windings with more than one protective device may require multiple overload tests in order to fully evaluate worst-case NORMAL USE loading and fusing.

IECNORM.COM : Click to view the full PDF of IEC TR 62354:2014

13.4.29 Mains transformers *(continued)*

Standard(s):	Subclause(s):	13.4.29 Mains transformers
IEC 60601-1:2005+A1:2012	15.5, 13.2.3	

e) Test set-up and PROCEDURE:

1) ***Normal heating:***

a) The mains transformer is placed either on a softwood surface or in the appliance in the same location as that of the test for normal heating [test 13.4.17 d)].

b) Connect the DUT to the a.c. power supply.

c) Energize the DUT and set up for the NORMAL CONDITIONS for maximum load.

d) Set a.c. supply voltage to + 10 % and – 10 % of the RATED voltage(s) or the extremes of the RATED voltage range(s).

e) Operate the DUT until all temperatures have stabilized.

f) Measure and record all temperatures including the room ambient.

g) Temperatures of windings are determined with COR (change of resistance – ΔR) measurement method (or with an ohmmeter).

h) Record other temperatures using the thermocouple method.

i) The maximum temperature of a part is determined by measuring the temperature rise of the part under test and adding it to the maximum allowed ambient temperature of NORMAL USE as defined by the MANUFACTURER.

2) ***Short circuit:***

Apply a short circuit or resistive load, as appropriate, at the ends of the windings or at the first point that can be short circuited.

Short-circuit the output winding under test. Continue the test until the protective device operates or THERMAL STABILITY is achieved. For transformers not tested according to test 4) below, apply the short circuit directly across the output windings.

3) ***Overload:***

Multiple overload tests may be needed to fully evaluate the worst-case NORMAL USE loading and fusing for windings with more than one protective device.

Connect the unit to a supply specified in the overload table in Section f). Resistively load and operate the secondary under the test.

Do not perform the overload test unless the protective device operated during the short circuit test.

a) This step is omitted if, based on a review of the provided protective devices and their performance data, the current at which the first protective device operates can be determined.

Load the winding under test to its NORMAL USE load until THERMAL STABILITY is reached. Progressively adjust the load in appropriate steps to approach the minimum current at which the protective device operates. Allow the windings to reach THERMAL STABILITY following each load adjustment, and record each load current value.

Following operation of a protective device, perform step b).

b) Shunt the protective device that operated in step a) above if it is external to the transformer. Load the winding under test based on the type of protective device as follows.

– Fuse in accordance with IEC 60127-1: 30 min at the appropriate test current specified in Table 17.

– Fuses not in accordance with IEC 60127-1: 30 min at the current according to the characteristics supplied by the fuse manufacturer, specifically the 30 min clearing-time current. If no 30 min clearing-time current data is available, use the test current specified in Table 17 until THERMAL STABILITY is achieved.

– Other protective device: until THERMAL STABILITY at a current just below the current that caused the device to operate in step a) above.

IECNORM.COM : Click to view the full PDF of IEC TR 62354:2014

13.4.29 Mains transformers *(continued)*

Standard(s):	Subclause(s):	13.4.29 Mains transformers
IEC 60601-1:2005+AMD1:2012	15.5, 13.2.3	

Table 17 – Test current for transformers

(IEC 60601-1:2005, Table 32)

Marked value of RATED current (*I*) of protecting fuse-link A	Ratio between test current and RATED current of the fuse-link
$I \leq 4$	2,1
$4 < I \leq 10$	1,9
$10 < I \leq 25$	1,75
$I > 25$	1,6

End this portion of the overload test at the specified time or after a second protective device opens.

– Load windings provided with an overcurrent protection to a test current specified in the table and operate them for the indicated test duration. Replace the overcurrent protector with links of negligible impedance.

– Load windings protected by a THERMAL CUT-OUT to a stable winding temperature of approximately 85 % of the THERMAL CUT-OUT temperature indicated in the table. Increase the test current by 5 %. When steady thermal conditions are again established, increase the load is again. Continue these steps until the thermal protector operates. Record the highest stable temperatures in the table.

Components intended to prevent overheating of the transformer during short circuit and overload [2) and 3) above] are included as part of the tests provided that

– the component is one with high-integrity characteristics, and

– two MEANS OF OPERATOR PROTECTION are provided between the output contacts of the transformer up to the COMPONENT WITH HIGH-INTEGRITY CHARACTERISTICS

Perform the tests under the conditions specified in test 13.4.17 d).

The overload test may be applied after rectification.

4) ***Transformer dielectric voltage withstand:***

This subclause is not applicable to transformers operating at a frequency above 1 kHz, which are tested in accordance with 8.8.3.

Conduct this test after the humidity preconditioning treatment.

Apply a test voltage across the winding indicated in the transformer dielectric strength table in Section f). Leave all other windings open.

Connect the transformer designated neutral conductor to the core.

Repeat the test with the other side of the primary winding connected to the core.

The electrical insulation between the primary winding and other windings, screens and the core of a MAINS SUPPLY TRANSFORMER is presumed to have been investigated by the dielectric strength tests performed on the assembled ME EQUIPMENT. In this case the dielectric strength tests need not be repeated.

The dielectric strength of the electrical insulation between turns and layers of each winding of a MAINS SUPPLY TRANSFORMER of ME EQUIPMENT should be such that after the humidity preconditioning treatment it passes the following tests.

a) Test transformers having any winding with a RATED voltage less than or equal 500 V or RATED frequency less than or equal 60 Hz with a voltage across the winding of five times the RATED voltage or five times the upper limit of the RATED voltage range of that winding and a frequency not less than five times the RATED frequency.

b) Test transformers having any winding with a rated voltage greater than 500 V or rated frequency greater than 60 Hz with a voltage across that winding of twice the rated voltage or twice the upper limit of the rated voltage range of that winding and a frequency not less than twice the rated frequency.

IECNORM.COM : Click to view the full PDF of IEC TR 62354:2014

13.4.29 Mains transformers *(continued)*

Standard(s):	Subclause(s):	13.4.29 Mains transformers
IEC 60601-1:2005+AMD1:2012	15.5, 13.2.3	

In the two cases above, however, the stress on the turn and layer insulation of any winding of the transformer should be such that the test voltage appearing at the winding with the highest RATED voltage does not exceed the test voltage specified for one MEANS OF PROTECTION, if the RATED voltage of such a winding is considered as the WORKING VOLTAGE. If this should occur, the test voltage on the primary winding should be reduced accordingly. The test frequency may be adapted to produce in the core approximately the magnetic induction present in NORMAL USE.

– Test three-phase transformers using a three-phase testing device or by three consecutive tests using a single-phase testing device.

– The value of the test voltage with respect to the core and to any screen between primary and secondary windings is to be in accordance with the specification of the relevant transformer. If the primary winding has an identified connection point for the neutral of the SUPPLY MAINS, such a point should be connected to the core (and screen if present) unless the core (and screen) are specified for connection to an unearthed part of the circuit. To simulate this, the core (and screen) is connected to a source with an appropriate voltage and frequency with respect to the identified connection point.

  If such a connection point has not been identified, connect side of the primary winding in turn to the core (and screen if present) unless the core (and screen) are specified for connection to an unearthed part of the circuit.

  To simulate this, connect the core (and screen) to a source with an appropriate voltage and frequency with respect to each side of the primary winding in turn.

– During the test, leave all windings not intended for connection to the SUPPLY MAINS unloaded (open circuit). For windings intended to be earthed at a point or to be operated with a point nearly at earth potential, connect that point to the core, unless the core is specified for connection to an unearthed part of the circuit.

– Initially not more than half the prescribed voltage is to be applied. It is then raised over a period of 10 s to the full value, which is then maintained for 1 min, after which the voltage is reduced gradually and switched off.

– Tests are not conducted at resonant frequencies.

f) Presentation of the test results:

TABLE: Transformer normal heating

Winding designation	T_1 °C	R_1 Ω	T_2 °C	R_2 Ω	ΔT °C	$T=T_2+\Delta T$ °C	Remarks

TABLE: Transformer short circuit

Winding under test	Protection	Measured temperatures °C			Test duration	Remarks
		Primary	Secondary	Ambient		
						Supply voltage: ___

IECNORM.COM : Click to view the full PDF of IEC TR 62354:2014

13.4.29 Mains transformers *(continued)*

Standard(s):	Subclause(s):	13.4.29 Mains transformers
IEC 60601-1:2005+AMD1:2012	15.5, 13.2.3	

TABLE: Overload							
Winding under test	Protection	Measured temperatures °C			Test duration	Test current or THERMAL CUT-OUT temperature	Remarks
		Primary	Secondary	Ambient			
							Supply voltage: ___

TABLE: Transformer dielectric strength					
Transformer under test	Test voltage applied to	Test voltage	Test frequency	Secondary voltage	Remarks

During the tests windings **did/did not** open.

Unacceptable RISKS **did/did not** occur.

The maximum temperatures of windings **did/did not** exceed the values found in Table 16.

After the tests the transformer **passes/does not pass** appropriate dielectric strength tests.

During test 4) above there **was/was not** flashover or breakdown of any part of the insulation and there was/was not detectable deterioration.

Sealing or potting **did/did not** flow out.

During the test, THERMAL CUT-OUTS **did/did not** operate.

There **was/was no** emission of flames, molten metal, poisonous or ignitable substance in hazardous quantities.

When tested in situ there **was/was no** deformation of ENCLOSURES to such an extent that mechanical strength was impaired.

Temperatures of DUT parts likely to be touched **did/did not** exceed the allowable values from Table 12.

LEAKAGE CURRENT limits **were/were not** exceeded.

Voltage of ACCESSIBLE PARTS **did/did not** exceed the allowable values.

NOTE 3 Ignore slight corona discharges, provided that they cease when the test voltage is temporarily dropped to a lower value, that this value is higher than the WORKING VOLTAGE and that the discharges do not provoke a drop in test voltage.

IECNORM.COM : Click to view the full PDF of IEC TR 62354:2014

Annex A
(informative)

Sequence of testing

A.1 Sequence of testing (IEC 60601-1:1988)

A.1.1 General requirements

A.1.2 Markings

A.1.3 Power input

A.1.4 Classification

A.1.5 Limitation of voltage and/or energy

A.1.6 ENCLOSURES and PROTECTIVE COVERS

A.1.7 Separation

A.1.8 Protective earthing, functional earthing and potential equalization

A.1.9 Mechanical strength

A.1.10 Moving parts

A.1.11 Surfaces, corners and edges

A.1.12 Stability and transportability

A.1.13 Expelled parts

A.1.14 Suspended masses

A.1.15 Radiation HAZARDS

A.1.16 Electromagnetic compatibility

A.1.17 Pressure vessels and parts subject to PRESSURE

A.1.18 Human errors

A.1.19 Temperatures – Fire prevention

A.1.20 Interruption of the power supply

A.1.21 Accuracy of operating data and protection against incorrect output

A.1.22 Abnormal operation, fault conditions, environmental tests*

A.1.23 Continuous LEAKAGE CURRENTS and PATIENT AUXILIARY CURRENTS at operating temperature*

A.1.24 Dielectric strength at operating temperature*

IECNORM.COM : Click to view the full PDF of IEC TR 62354:2014

A.1.25 Humidity preconditioning treatment*

A.1.26 Dielectric strength test **(COLD CONDITION)***

A.1.27 LEAKAGE CURRENT after humidity preconditioning treatment*

A.1.28 Overflow, spillage, leakage, humidity, ingress of liquids, cleaning, sterilization and disinfection*

A.1.29 ENCLOSURES and covers

A.1.30 Components and general assembly

A.1.31 MAINS PARTS, components and layout

A.1.32 Construction and layout

A.1.33 CATEGORY AP and CATEGORY APG ME EQUIPMENT

A.1.34 VERIFICATION of markings

NOTE The sequence of the tests marked by an * is described as mandatory in Annex C or IEC 60601-1:1988.

A.2 Sequence of testing (IEC 60601-1:2005)

A.2.1 RISK MANAGEMENT PROCESS for ME EQUIPMENT or ME SYSTEMS and ESSENTIAL PERFORMANCE

A.2.2 General requirements

A.2.3 Classification of ME EQUIPMENT and ME SYSTEMS

A.2.4 Determination of APPLIED PARTS and ACCESSIBLE PARTS

A.2.5 ME EQUIPMENT identification, marking and documents

A.2.6 Energy consumption (power input)

A.2.7 Limitation of voltage, current or energy

A.2.8 Separation of parts

A.2.9 CREEPAGE DISTANCES and AIR CLEARANCES

A.2.10 HAZARDS associated with moving parts

A.2.11 HAZARD associated with surfaces, corners and edges

A.2.12 Serviceability

A.2.13 Accuracy of controls and instruments and protection against hazardous outputs

A.2.14 Instability HAZARDS

A.2.15 Noise, vibration and acoustic energy

A.2.16 Interruption of the power supply / SUPPLY MAINS to ME EQUIPMENT

A.2.17 Protective earthing, functional earthing and potential equalization of ME EQUIPMENT

A.2.18 Excessive temperatures in ME EQUIPMENT

A.2.19 LEAKAGE CURRENTS and PATIENT AUXILIARY CURRENTS at operating temperature

A.2.20 Humidity preconditioning treatment

A.2.21 Dielectric strength (COLD CONDITION)

A.2.22 Defibrillation protection

A.2.23 Expelled parts HAZARD

A.2.24 Pressure vessels and parts subject to pneumatic and hydraulic pressure

A.2.25 HAZARDS associated with support systems

A.2.26 Mechanical strength

IECNORM.COM : Click to view the full PDF of IEC TR 62354:2014

A.2.27 HAZARDOUS SITUATIONS and fault conditions

A.2.28 MAINS SUPPLY TRANSFORMERS of ME EQUIPMENT and transformers providing separation in accordance with 8.5

A.2.29 ME EQUIPMENT components and general assembly

A.2.30 MAINS PARTS, components and layout

A.2.31 Insulation other than wire insulation

A.2.32 Fire prevention and constructional requirements for fire ENCLOSURES of ME EQUIPMENT

A.2.33 Overflow, spillage, leakage, ingress of water, cleaning, disinfection, sterilization and compatibility with substances used with the ME EQUIPMENT

A.2.34 CATEGORY AP and CATEGORY APG ME EQUIPMENT

A.2.35 VERIFICATION of markings

IECNORM.COM : Click to view the full PDF of IEC TR 62354:2014

Annex B
(informative)

Information typically required for product safety testing (Guide)

B.1 Purpose

The following information is useful when performing product safety and EMC testing. MANUFACTURERS may benefit from reviewing these requirements even if ME EQUIPMENT is only undergoing an initial evaluation.

B.2 Description

Brief description and INTENDED USE of the device under test (DUT), including the name and model number.

B.3 Intended use environment

- Where will the DUT be installed and used?
- In what environments of use (i.e. home, healthcare facility, transportation, outdoors) will it be found?

B.4 Construction

- Composition of DUT
- Assembly of DUT
- Auxiliary equipment
- What are its dimensions and weight?
- Is the floor loading reasonably well distributed?

B.5 List of safety-related components and relevant approvals

A list of all safety-related components (i.e. parts used in mains, radiation sources, protection means, critical materials, internal wiring). For all these components, request copies of relevant approvals and licenses from established test houses and certification bodies, with ratings (just copies of data sheets are not acceptable).

B.6 Test system

Block diagram of the test system (including the safety conception: insulation diagram) and supporting equipment. Diagram should show what is within and outside the test area. It should include cables, DUT, and peripherals. A mechanical assembly drawing with complete parts list.

B.7 Power

- What are the power requirements (line voltage, current and frequency) for the DUT and support equipment?
- How many power cords are there for the DUT and support equipment?
- What types of power connector are used?

IECNORM.COM : Click to view the full PDF of IEC TR 62354:2014

B.8 Grounding

List any special grounding requirements.

B.9 Modes of operation; configurations

- User manual and sales brochures
- Drawing of markings
- How will the DUT be operated?
- How many modes will be tested?
- How many line voltages are required to be tested?
- When only one mode is to be tested, provide rationale for selecting that mode.
- How many DUT configurations will be tested? (Use typical installation practices or regulatory requirements.)
- I/O ports (SIP/SOP) and how will they be used?

B.10 Failure modes

Define what constitutes a failure for performance, and describe how errors are identified and monitored.

B.11 RISK ANALYSIS according with ISO 14971

B.12 Software

Software validation (including software specification requirements, software development requirements and software test plan with results of the tests).

B.13 Auxiliary equipment

List any equipment required to operate or serve as loads for the DUT (if applicable).

B.14 Transformers and chokes

- Installation schematic with RATED voltage, current, performance, colours/numbers of leads, wire diameters, integrated fuses
- Constructional drawing (cross section) with all parts numbered (e.g., core, core insulation, isolation, spacer, etc.)
- Part list with description of: material, manufacturer, mat.type/model, flameclass, UL-card or UL listing file number.
- Construction requirements
- Test samples: potted and unpotted

IECNORM.COM : Click to view the full PDF of IEC TR 62354:2014

Annex C
(informative)

Testing and measuring equipment

Table C.1 – IEC 60601-1:1988+AMD1:1991 and AMD2:1995

Clause	Test	Recommended test equipment
4	Humidity preconditioning	Humidity cabinet
6	Durability of markings	Cloth, distilled water, isopropyl alcohol and methylated spirit and a suitable timer/ stop watch
7	Power input	Suitable devices for the voltage, current/ power and frequency
10	Environmental conditions	Climate chamber controlling temperature and humidity, supply 1 phase and 3 phase variacs
15	Limitations voltage/ energy	Suitable oscilloscope recorder /set-up and RCL meter
16	ENCLOSURES and PROTECTIVE COVERS	Pull\push tester, test hook, test finger, test pin, test rod 4 mm and 12 mm
17	DEFIBRILLATOR-PROOF APPLIED PARTS	DEFIBRILLATION-PROOF APPLIED PART test box
18	Earth resistance	Earth resistance tester
19	LEAKAGE CURRENTS	Variac, V-meter, mV-meter, diverse circuits, memory scope with measurement functions, measuring device (MD), aluminium foil, isolation transformers
20	Dielectric strength test	HIGH-VOLTAGE tester, isolating transformer for HIGH-VOLTAGE tests
21	Mechanical strength	Impact hammers, weights, hard wood plate, balance
24	Stability tests	Inclinometer or trigonometric calculation (slope up to 10°)
25	Expelled parts	As per IEC 60065
29	X-radiation	Radiation meter
36	EMC requirements	EMC equipment
39	Common requirements AP and APG	Volt meter, test rod 4 mm, 12 mm , equipment resistance meter according to ISO 471 / ISO 1853 / ISO 2878
40	Requirements for CATEGORY AP ME EQUIPMENT	Same equipment as Clause 40 including special gases
41	Requirements for CATEGORY APG ME EQUIPMENT	Same equipment as Clause 40 including special gases
42	Heating tests	V-meter, A-meter, a.c./d.c., temperature indicator/ recorder suitable for this function, and thermocouples, test corner, 4 wire resistance unit
44	Spillage	Liquids, steriliant measuring cups, pipette, different liquids for cleaning, IP appliances, sterilisation to client specification, sterilisation with steam
45	Pressure	Pressure gauges
51	Hazardous output	Oscilloscope, same equipment as for Clause 42 above
52	Abnormal operation and fault conditions	Apparatus for ball pressure test, same equipment as for Clause 42 above
53	Environmental tests	Humidity chamber
56	Components	Counter, torque tester, weights
57	MAINS PART	Pull tester, different sizes of cables, winding tester for transformers, micrometer
59	Construction layout	Ball pressure test apparatus, micrometer/callipers, force gauge, multimeter, oven, apparatus for rubber ageing in oxygen.
Appendix F	Flammable mixtures	See also Clause 37 to 40 above, test apparatus

IECNORM.COM : Click to view the full PDF of IEC TR 62354:2014

Annex D
(informative)

Suitable measuring supply circuits

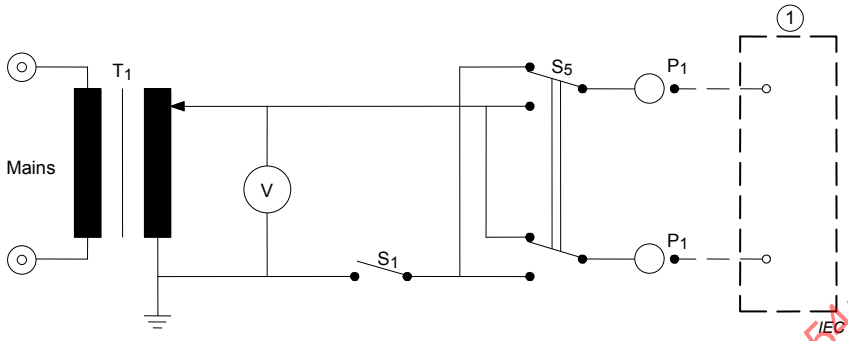

For legends, see Table D.1.

Figure D.1 – Measuring supply circuit with one side of the SUPPLY MAINS at approximately earth potential

(IEC 60601-1:2005, Figure F.1)

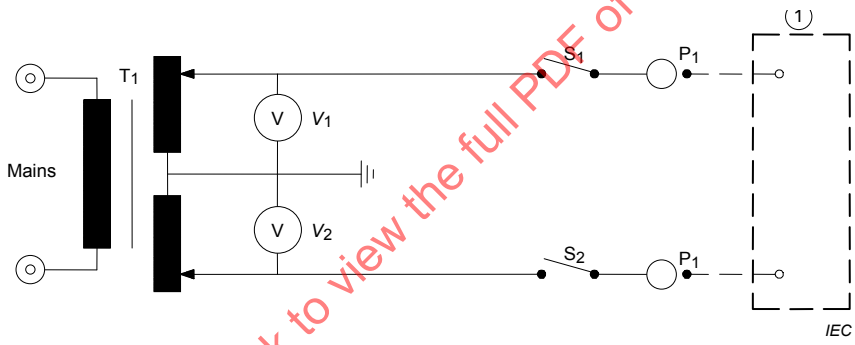

For legends, see Table D.1.

Figure D.2 – Measuring supply circuit with SUPPLY MAINS approximately symmetrical to earth potential

(IEC 60601-1:2005, Figure F.2)

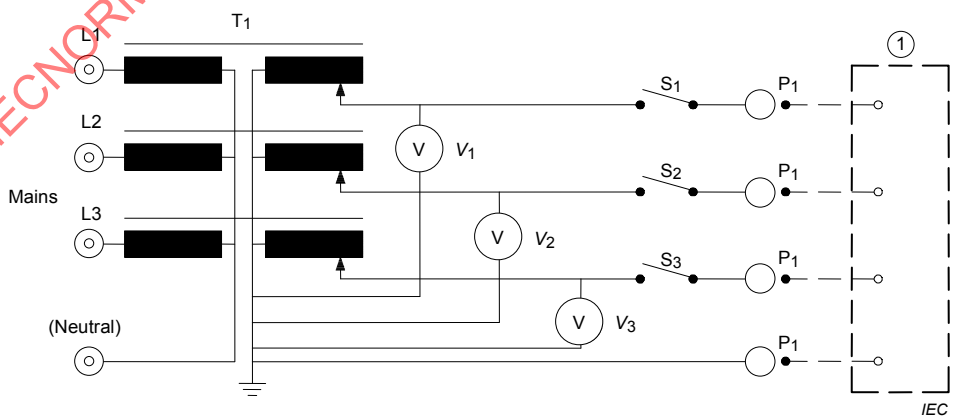

For legends, see Table D.1.

Figure D.3 – Measuring supply circuit for polyphase ME EQUIPMENT specified for connection to a polyphase SUPPLY MAINS

(IEC 60601-1:2005, Figure F.3)

IECNORM.COM : Click to view the full PDF of IEC TR 62354:2014

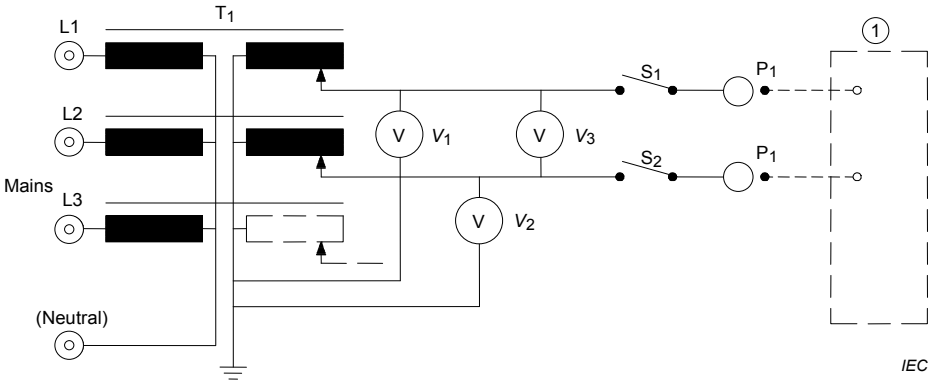

For legends, see Table D.1.

Figure D.4 – Measuring supply circuit for single-phase ME EQUIPMENT specified for connection to a polyphase SUPPLY MAINS

(IEC 60601-1:2005, Figure F.4)

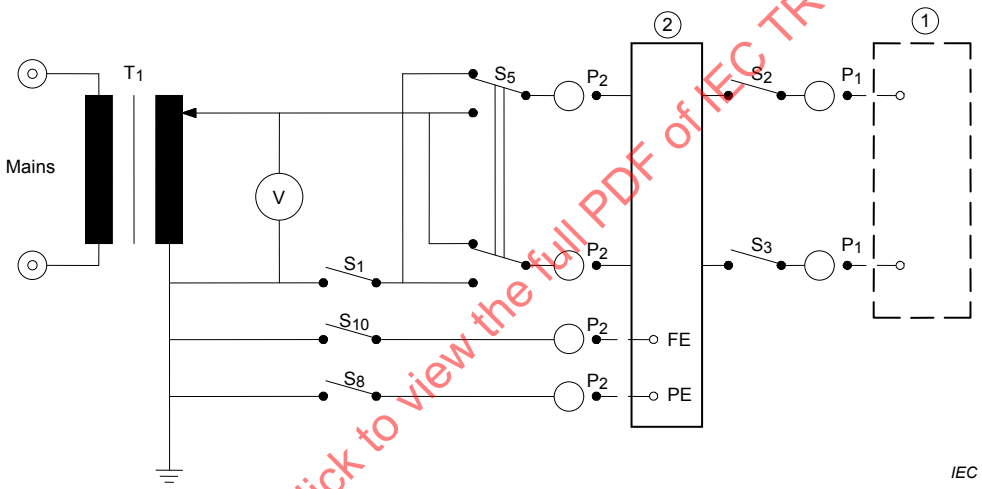

For legends, see Table D.1.

Figure D.5 – Measuring supply circuit for ME EQUIPMENT having a separate power supply unit or intended to receive its power from another equipment in an ME SYSTEM

(IEC 60601-1:2005, Figure F.5)

IECNORM.COM : Click to view the full PDF of IEC TR 62354:2014